MAC 1200

Servicing Instructions

Version 1.2

227 492 21 ENG Revision F

GE Medical Systems
Information Technologies

Caution:
During repairs/service interventions, observe the protective measures against damage due to ESD.

* ***GE Medical Systems*** *Information Technologies* considers itself responsible for the effects on safety, reliability, and performance of the equipment, only if:

  - assembly operations, extensions, readjustments, modifications, or repairs are carried out by
    GE Medical Systems *Information Technologies* or by persons authorized by ***GE Medical Systems*** *Information Technologies*,

  - the electrical installation of the relevant room complies with the applicable national and local requirements, and

  - the instrument is used in accordance with the instructions for use.

* This manual contains service information; operating instructions are provided in the operator's manual of the instrument.

* This manual is in conformity with the instrument at printing date.

* All rights are reserved for instruments, circuits, techniques, and names appearing in the manual.

Trademarked names appear throughout this document. Rather than list the names and entities that own the trademarks or insert a trademark symbol with each mention of the trademarked name, the publisher states that it is using the names only for editorial purposes and to the benefit of the trademark owner with no intention of improperly using the trademark.

900 SC, ACCUSKETCH, AccuVision, APEX , AQUA-KNOT, ARCHIVIST, Autoseq, BABY MAC, C Qwik Connect, CardioServ, CardioSmart, CardioSys, CardioWindow, CASE, CD TELEMETRY, CENTRA, CHART GUARD, CINE 35, COROLAN, CORO, COROMETRICS, Corometrics Sensor Tip, CRG PLUS, DASH, Digistore, Digital DATAQ, E for M, EAGLE, Event-Link, FMS 101B, FMS 111, HELLIGE, IQA, IMAGE STORE, INTELLIMOTION, LASER SXP, MAC, MAC-LAB, MACTRODE, MARQUETTE, MARQUETTE MAC, MARQUETTE MEDICAL SYSTEMS, MARQUETTE UNITY NETWORK, MARS, MAX, MEDITEL, MEI, MEI in the circle logo, MEMOPORT, MEMOPORT C, MINISTORE, MINNOWS, Monarch 8000, MULTI-LINK, MULTISCRIPTOR, MUSE, MUSE CV, Neo-Trak, NEUROSCRIPT, OnlineABG, OXYMONITOR, Pres-R-Cuff, PRESSURE-SCRIBE, QMI, QS, Quantitative Medicine, Quantitative Sentinel, RAC, RAMS, RSVP, SAM, SEER, SILVERTRACE, SOLAR, SOLARVIEW, Spectra 400, Spectra-Overview, Spectra-Tel, ST GUARD, TRAM, TRAM-NET, TRAM-RAC, TRAMSCOPE, TRIM KNOB, Trimline, UNITY logo, UNITY NETWORK, Vari-X, Vari-X Cardiomatic, VariCath, VARIDEX, VAS, and Vision Care Filter are trademarks of GE Marquette Medical Systems, Inc., registered in the United States Patent and Trademark Office.

12SL, 15SL, Access, AccuSpeak, ADVANTAGE, BAM, BODYTRODE, Cardiomatic, CardioSpeak, CD TELEMETRY®-LAN, CENTRALSCOPE, Corolation, EK-Pro, EDIC, Event-Link Cumulus, Event-Link Cirrus, Event-Link Nimbus, HI-RES, ICMMS, IMAGE VAULT, IMPACT.wf, INTER-LEAD, LIFEWATCH, Managed Use, MARQUETTE PRISM, MARQUETTE® RESPONDER, MENTOR, MicroSmart, MMS, MRT, MUSE CardioWindow, NST PRO, NAUTILUS, OCTANET, O2 SENSOR, OMRS, PHi-Res, Premium, Prism, QUIK CONNECT V. QUICK CONNECT, QT Guard, SMARTLOOK, SMART-PAC, Spiral Lok, Sweetheart, UNITY, Universal, Waterfall, and Walkmom are trademarks of ***GE Medical Systems*** *Information Technologies*, Inc.

Copyright 2002 ***GE Medical Systems*** *Information Technologies GmbH*

How To Reach Us...

Service Calls and Product Support

To open a service call or obtain product support call the numbers below:

800.558.7044 (US & Canada)
Outside the US, contact your local GE representative or distributor.

For other product information please contact one of the offices listed on the back cover of the manual.

Ordering Accessories and Service Parts

Order accessories (leadwires, electrodes, recording papers, etc.) or service parts (manuals, circuit boards, cables, software, etc.) from:

Accessories and Supplies

GE Healthcare
8200 West Tower Avenue
Milwaukee, WI 53223
Telephone: 800.558.5102 (US only)
414.355.5000 (outside US)
Fax: 414.355.3790

Service Parts

GE Healthcare
P.O. Box 9100, 100 Marquette Drive
Jupiter, FL 33468-9100
Telephone: 800.558.7044 (US only)
561.575.5029 (outside US)
Fax: 800.421.6841 (US only)
561.575.5050 (outside US)

Have the following information available before calling:

- part number of the defective part, or
- model and serial number of the equipment,
- part number/name of the assembly where the item is used, and
- item name.

Ordering Manuals

When ordering additional operator manuals, be sure to include the software version of the product.

Other Questions or Problems

For additional information contact one of the offices listed on the back cover of the manual or visit our website at http://www.gehealthcare.com.

GE Medical Systems *Information Technologies*
8200 W. Tower Ave., Milwaukee, WI 53223 U.S.A.
© 2006 General Electric Company. All rights reserved.

GE Medical Systems *Information Technologies*, a General Electric Company, going to market as GE Healthcare.

1 Device description 7
1.1 Block circuit diagram of entire instrument 8
1.2 Mechanical components 9
2 Functional description 11
2.1 Switching power supply 11
2.2 PCB NC Battery Charge 11
2.2.1 Charging circuit for the NC battery 11
2.2.2 Device behavior depending on the state of battery charge 12
2.3 PCB Control CS_CI 12
2.3.1 Generation of internal power supplies 12
2.3.2 Switch On/Off circuit 13
2.3.3 ECG recording and front-end processing 14
2.3.4 Controller core 14
2.3.5 Real time clock 15
2.3.6 Memory 16
2.3.7 LCD graphics display interface 16
2.3.8 Keypad interface 17
2.3.9 Printhead control 17
2.3.10 Motor control 18
2.3.11 RS-232 interface 19
2.3.12 Buzzer 19
2.4 PCB Modem Supply CS_M 19
2.5 Internal interfaces 19
2.5.1 Mechanical interfaces 19
2.5.2 Electronic interfaces 20
2.5.2.1 Interface to the switching power supply 20
2.5.2.2 Interface to the PCB NC battery charge 20
2.5.2.3 Interface to the LCD Graphics Display 22
2.5.2.4 Interface to the keypad 22
2.5.2.5 Interface to the printhead 22
2.5.2.6 Interface to the motor 23
2.5.2.7 Interfaces for production tests 24
2.5.2.8 Interface to PCB Modem Supply CS_M 25
2.6 Interfaces to peripherals 26
2.6.1 Electronic interfaces 27
2.6.1.1 RS-232 interface 27
2.6.1.2 Patient input 28
2.7 Software Updates 29
2.8 Limitations 29
3 System test functions 31
3.1 General information 31
3.2 Test start 31
3.3 Display test 32
3.4 Keyboard test 33

3.5 Motor test 33
3.6 Test results 34
3.7 Self-test 34
3.8 Recording test 35
3.9 V24 tests 35
3.10 Time and date 37
3.11 Electrode test 37
3.12 Time constant 38
3.13 Setting the device model 38
3.14 Switching over the program for interpretation 40
3.15 Pace enhance 41
3.16 Serial number 41
3.17 ACI-TIPI 41
4 Repair instructions *43*
4.1 Safety instructions 43
4.2 Replacing components 43
5 Troubleshooting tips *47*
6 Adjustment instructions *51*
7 Servicing and maintenance *53*
7.1 Technical inspection 53
7.1.1 Visual check 53
7.1.2 Test functions 54
7.1.2.1 Recommended testing instruments and accessories 54
7.1.2.2 Test preparations 54
7.1.2.3 Operating and display unit performance tests 54
7.1.2.4 Test for recording speeds 25 and 50 mm/s 55
7.1.2.5 Device Test result check 55
7.1.2.6 RS-232 interface test 55
7.1.2.7 Analysis of the ECG signals and HR value 55
7.1.2.8 Pacemaker identification test 56
7.1.2.9 Identification of disconnected electrodes 57
7.1.2.10 Checking the charge status of the NC battery 57
7.1.3 Safety Analysis Tests 57
7.1.3.1 General information 57
7.1.3.2 Protective Earth Resistance Test 58
7.1.3.3 Measurement of Leakage Current 58
7.1.3.3.1 Enclosure Leakage Current Test 58
7.1.3.3.2 Patient Leakage Current Test 59
7.2 Maintenance, cleaning, disinfection 60

8 Parts List ***61***

9 Specifications ***65***

10 Device Documents ***73***

Revision History

Each page of this manual has the document number followed by a revision letter, located at the top of the page. This letter identifies the manual update level. The latest letter of the alphabet corresponds to the most current version of the document.

The revision history of this manual is summarized below.

Date	ECO No	Revision	Remarks
March 05,1999	--	A	V 1.0, initial release
May 10, 1999	062 136	B	Software Package for MAC 1100/1200 (Software change) page 55, new MRI
June 29, 1999	062727	C	Pin 4 – Coding pin, page 19, Supplementation to chapter 3.4; page 29 Software Release V 5.02 page 55,new MRI, PCB Control CS_CI , Sheet 9 new Index PCB Control CS_C, new Index PCB Battery Charge CS_CI, new Index
February 4, 2000	062920	D	Device Version V1.1 with Remote Start Input, internal Modem Supply and Software Release V5.1
January 9, 2002	068851	F	Software Release V5.21 for MAC1200

1 Device description

This Service Manual describes device version **V1.2 of MAC1200**

The MAC 1200 is portable electrocardiograph with an integrated printing unit.
It is used to acquire, record and process ECG signals.
It is designed for line-power and battery operation. A power supply and battery with a charging circuit are integrated into the instrument.

The integrated LCD graphics Display shows 3 ECG channels. It also displays status information, filter settings, speed/format, gain and the status of the electrodes.

With the setup feature, the user is able to setup the device and the modes for his own needs.

The patient cable for the acquisition of ECG signals is connected by means of a 15-pin connector as used with MAC 500. Patient cables used with MAC 1000 cannot be connected to the MAC 1200.

In Automatic Mode, the acquired ECGs can be transmitted to MUSE or a PC via an RS-232 interface. With the additional option Patient Memory, all acquired ECGs can be transmitted.

MAC1200 with version **V1.1** has all features of the version V1.0 described above, additionally version V1.1 has a **Remote Start Input**, an **internal Modem Power Supply** and the new **Software Release V5.1.**

Device Version	**Part number**	**Name**	**Supply Voltage**	**Remarks**
V 1.2	101 168 23	MAC 1200	95 ... 240V ac	US version

Hardware functional blocks:

The hardware comprises the following main functional blocks:

- Switching power supply
- NC Battery
- PCB NC Battery charge
- PCB Control CS_CI
- PCB Modem Supply CS_M
- Printing unit
- Keypad
- ¼ VGA graphics display, monochrome

1.1 Block circuit diagram of entire instrument

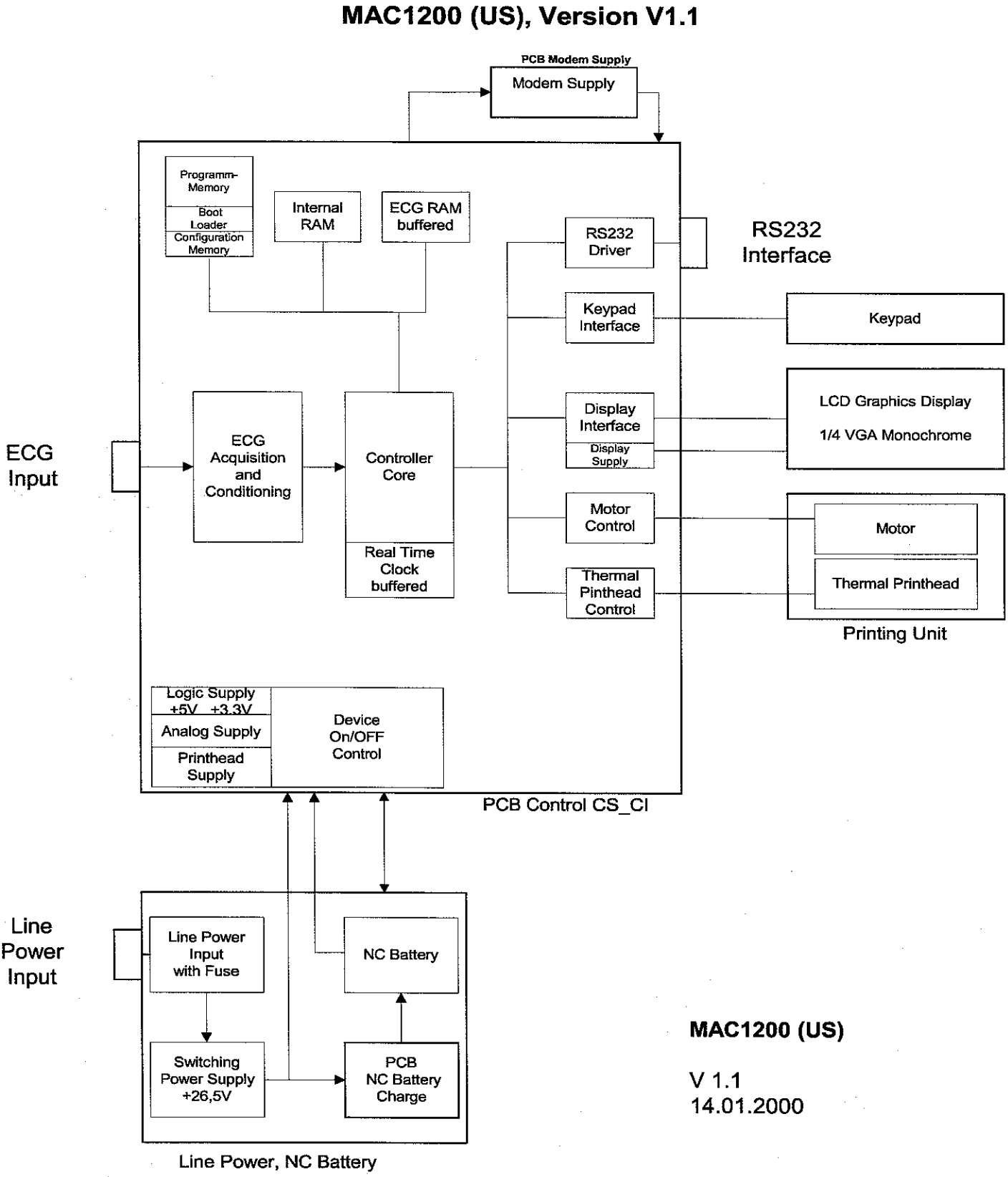

1.2 Mechanical components

The main mechanical components comprise the **upper and lower shell** of the **MAC1200** The lower shell serves as a basic unit to receive the following assemblies:

- Line power input module with fuse
- Switching power supply
- NC Battery
- PCB NC Battery Charge
- PCB Control CS_CI
- PCB Modem Supply CS_M
- Graphics display
- Thermal printing unit
- Paper container

The upper shell accommodates the keypad, which is connected to the PCB Control CS_CI via a 26-pin connector.

The MAC 1200 can be opened by releasing 5 screws at the bottom of the lower shell, opening the paper flap and lifting up the upper shell a little bit to remove the keypad cable from the PCB Control CS_CI. The upper shell then can be removed completely.

To replace the NC Battery, the battery flap at the bottom of the lower shell must first be unlocked with a screw-driver before it can be removed.

The 15-pin input connector to connect the **patient cable** and the 9-pin connector for the **RS-232 interface** are located directly on the PCB Control CS_CI.

2 Functional description

The block circuit diagram of the entire instrument in Section 1.1 and the functional blocks of circuit diagram sheets (P-plans) describe the individual functional blocks.

2.1 Switching power supply

The switching power supply generates the fundamental device voltage for the PCB Control CS_CI and for the PCB NC Battery Charge.

It has the following input specifications:

Input voltage range: 85 ... 264V ac
Line frequency range: 47 ... 65 Hz

The output voltage is +26.5 V dc, the maximum load is 1.5A.

2.2 PCB NC Battery Charge

MAC 1200 can operate battery powered. With a new, fully charged NC battery, in Automatic Mode up to 50 ECG can be recorded.

The PCB NC Battery Charge, controls and monitors the charging process, depending on the status of the battery and the status of the device.

2.2.1 Charging circuit for the NC battery

An integrated charging device is used to charge the battery. During charging it monitors the battery voltage function and switches over from rapid charging to trickle charging.

Applying the line power to the MAC 1200 , or insertion of the battery activates the charging circuit.
During a recording, the charging current is reduced.
In standby mode, a depleted battery is fully charged within 4 hours.

2.2.2 Device behavior depending on the state of battery charge

Depending on the status of the battery and the status of the device, the following behavior occurs:

State1: *Battery depleted, line power supply is connected up:*
Battery charged in rapid mode; when fully charged, switchover to trickle charging.

State 2: *Battery full, line power supply is connected up:*
Battery charged in rapid mode for some minutes till the charging circuit recognizes "battery full", then switchover to trickle charging.

State 3: *Battery depleted, no line power supply, device is switched on:*
Device inoperative.

State 4: *Battery full, no line power supply, device is switched on*:
Device fully operative.
When battery is almost depleded, the LEDBAT signal is activated to Indicate that the device should be charged by connecting to the line power supply. If the operation is continued without line power, MAC 1200 will shut down itself when a minimum level is reached to prevent the battery from a excessive discharge.

State 5: *Battery depleted, line power supply is connected up, device is switched on:*
Battery is charged in rapid mode, device is fully operative, including recording.
During recording, the charging current is reduced. If in this phase, a lot of recordings take place, the battery is not fully charged within 4 hours.

2.3 PCB Control CS_CI

The PCB Control CS_CI is the mainboard of the MAC 1200 and accommodates the control functions of the device, except the line power supply and the NC battery-charging controller.

2.3.1 Generation of internal power supplies

Logic power supply + 5V and + 3.3V

The processor core and the memory is a + 3.3V design.

The interface functions to display, to RS-232, to the printing unit and to the ECG acquisition unit are supplied with + 5V.

Both the + 3.3V and the + 5V are generated separately by a clock-rated voltage controller. By using the „adjustable version" of the voltage controller, both supplies are based on the same voltage controller. The output voltage is determined by appropriate dimensioning of the voltage divider at the feedback input of the voltage controller.

Standby supply + 5VSTB and + 3.3VSTB

The standby supply + 5VSTB supplies the ON/OFF Control, the + 3.3VSTB buffers the patient ECG memory when the device is turned off.
Both supplies are generated together from one low-power linear regulator with low quiescent supply current.

Analog supply + 12V

+ 12V is used for the heating control and temperature monitoring of the printing unit, which requires only a current of a few milliamperes.
This supply is generated by a linear regulator with feedback input.

2.3.2 Switch On/Off circuit

The Switch On/Off Circuit consists of the On/Off Control and the Voltage Control.

The **On/Off Control** switches the device on or off by switching the device supplies +UVERS and +USUPPSW.
The On/Off Control is supplied from the + 5VSTB.

Device On Sequence:

The transition from Device Off State, or Standby State when line power is connected to Device On State can only be activated by pressing the On/Off button.

Device Off Sequence:

The transition from Device On State to Device Off State, or Standby State when line power is connected can be achieved as follows:

- pressing the On/Off button
- when the control core activates the signal DEV_OFF,
- when the voltage control applies the signal REG_OFF_, because the battery voltage gets too low during battery operation.

The **Voltage Control** controls the battery voltage during battery operation.

The signal BATT_LEV2 indicates that the battery charge has gone down, and the device should be connected to the line power soon.

The signal BAT_LEV1 indicates that the battery has been discharged almost completely, the device should be connected to the line power immediately, otherwise the device will shut down within few minutes.

If battery discharge is continued without connecting to the line power, the signal REG_OFF_ is activated and the device is switched off.

2.3.3 ECG recording and front-end processing

The patient input is classified as being cardiac floating and is defibrillation-proof.

The patient leads are connected with a 15-pin connector with a special form for the specified and released patient cables for the MAC 1200.

The main element of the ECG recording and front-end processing is a set of chips comprising 3 ASICs. Pace detection is realized by a separate circuit.

Every disconnected electrode is detected by a special AC measurement, which allows higher impedance between electrode and patient.

N common-mode compensation ensures suppression of interference, at the same time serving to improve the in-phase suppression of the input electrodes.

To protect patients, the ECG recording and front-end processing are assembled as floating components. Digital signals from and to the controller core are transmitted via opto-electronic couplers. The floating supply +/- 5V is generated by an isolated flyback converter from the + 5V logic power supply.

2.3.4 Controller core

The actual core comprises the Motorola Power PC MPC821, which contains the following integrated components:

- chipselect logic
- DRAM controller
- SCC and SMC for RS-232
- LCD controller
- SPI Interface

- I/O ports
- Real-Time Clock counter register

In addition, the MPC821 contains a JTAG port with test and programming capabilities.

The MPC821 has the following additional power supplies:
- VDDSYN, filtered from the + 3.3V logic supply, for the clock generation.
- KAPWR, generated from the + 3.3V logic supply, or from a battery when device is off, used for buffering the RTC Counter Register.

The **clock generation** for the MPC821 is realized by a quartz oscillator with 32.768KHz. The system clock CLOCKOUT is adjusted with the internal PLL register. The system frequency is 25 MHz.

The **Watchdog /Reset Generation** is implemented separately in an integrated system monitoring chip. It has the following functions:

- Power-up reset for the MPC821 when the device is switched on
- Voltage monitoring of the + 3.3V and + 5V, with reset generation
- Watchdog
- Switchover to battery supply for patient ECG memory when device is switched off
- Signal for access protection for patient ECG memory when device is switched off

The **Reset Configuration** defines startup conditions like boot port size and clock generation source.

Four LEDs indicate the device status in addition:

LED1:	active when a HRESET_ occurs
LED2:	indicator for the logic supply
LED3, LED4:	indicate internal software states

The **control register** comprises device control signals to switch off the device, control battery charging and display control signals.

The **status register** contains information on the device hardware configuration and the state of the battery charge.

2.3.5 Real time clock

With Software V5.2, two options for the real time clock are supported. The software checks for an external real time clock chip (X13 on PWA control). This chip is available with Index G of PWA Control CS_CI and Index F of PWA Control CS_C.
If the external RTC is found, it will be used for the clock function. If not, the internal clock of the MPC821 will be used. The external RTC is more accurate than the internal one. Both clocks are buffered by the voltage KAPWR.

2.3.6 Memory

The complete memory of the MAC 1200 is located on the PCB Control CS_CI.
The software of the device can be loaded through the JTAG Port during the production process, or for service purposes with the appropriate programming software through the RS-232 interface.

Program Memory:

Type:	Flash, + 3.3V supply
Organization:	1 Mbit x32, 4 Mbyte
Waitstates:	1 Waitstate

DRAM:

Type:	EDO DRAM, + 3.3V supply
Organization:	1 Mbit x32, 4 Mbyte
Waitstates:	0 Waitstate

Patient ECG Memory:

Type:	buffered SRAM, + 3.3V supply
Organization:	256 Kbit x16, 512Kbyte
Waitstates:	1 Waitstate

Configuration Memory:

The configuration memory is part of the program memory Flash. With special hardware and software protection facilities, write access to the Flash is only possible in the defined configuration memory of the Flash. Thus an external configuration Memory like an EEPROM is not required.

2.3.7 LCD graphics display interface

For the LCD interface to the ¼ VGA monochrome LCD interface, the internal LCD controller of the MPC821 is used.

Controller Interface:

For the digital control signals, delivered from the MPC821, only an output driver is required.

LCD Power Supply:

The LCD power supply VEE of -23V is generated from the +5V logic supply. The generation starts after HRESET_ becomes inactive to ensure that the logic supply of +5V first is applied to the display.

Adjusting Contrast:

Contrast adjustment of the Display is accomplished with the contrast voltage V0. The level of V0 is controlled with the PWM signal BLCD_CONTR from the timer module of the MPC821. In addition, the contrast voltage is temperature compensated.

Backlight:

The LCD backlight converter for the CCFL tube is located on the PCB Control CS_CI too.
The backlight converter is generated from the +5V logic power supply.
The signal BLCD_ENBA switches the backlight on or off.
The user can define the backlight active time in the configuration menu.

2.3.8 Keypad interface

The keypad interface contains the control register for 8 keypad columns and the receiving register for 7 keypad rows, and the control signals for the status LEDs: LED_LIN, LED_BATT, LED_START and LED_STOP.

Using the matrix of 8 x 7, up to 56 keypads can be detected.

Identification of the key pressed is as follows:
The controller activates a column, activation is via low-level, then the row-register is read to identify the pressed key by a low-level. This procedure is repeated with the next column, till all columns have been activated.

2.3.9 Printhead control

The printhead controller takes on the complete control of the 216-mm thermal printhead with a line width of 200 mm.
The output rate to the printhead is 1000 /sec. The resolution in the Y-direction is 8 dot/mm, in the X- time axis up to 40 dots/mm.

Thermal Printhead Dot Control:

The MPC821 prepares a complete dot column and sends it to the FIFO. A complex PLD reads out a complete column of the FIFO and generates the digital control signals for the printhead, which are shifted in series.

The duration of heating a dot column is defined through the pulse width of the PWM Signal HEAT that is generated from the complex PLD too.
In addition, the duration of heating a dot column is influenced by the thermal printhead monitoring.

Thermal Printhead Temperature Monitoring:

The thermal printhead temperature monitoring measures the temperature of the thermistor, located on the printhead. A constant current source effects a temperature-dependent voltage drop.

If a printhead temperature of 55°C is exceeded, the signal REC_OVHEAT_ is activated and the heating of the printhead is prevented by disabling the signal STROBE.
Only when the printhead temperature drops below 50°C is the signal REC_OVHEAT_ disabled and the heating via the signal STROBE re-enabled.

In addition, a continuous reduction of the heating duration occurs with increasing printhead temperature, resulting in a regular typeface throughout the entire temperature range.

2.3.10 Motor control

Paper transportation for the speeds 5mm/s, 25mm/s and 50mm/s is driven by a stepping motor. The stepping motor is controlled by an integrated stepping motor driver circuit. The current for the motor is adjusted by the sense resistors of the stepping motor driver.

For the speed 5mm/s, the motor current is reduced, triggered by the signal LOW_SPEED.

The motor speed is controlled by the frequency of the signal RECTMR_STEP, which is generated by the timer unit of the MPC821.
The driver circuit is enabled by the signal REC_MOTEN, the driver is powered from +22,5V.

2.3.11 RS-232 interface

The MAC1200 has an RS-232 interface accessible with a 9-pin Sub-D connector. Except for the RS-232 driver chip, the interface is integrated into the control core of the MPC821.

The interface has the following attributes:
- hardware handshake with the signals RTS and CTS
- or software handshake with XON/XOFF
- transmission speeds from 4800 ... 57600 Baud
- maximum input voltage range: +/- 15V
- minimum driver output voltage: +/- 5V
- maximum ESD interface protection: +/- 10kV

From version V1.1, MAC1200 additionally provides a modem power supply voltage and a remote start input on the RS-232 interface.

2.3.12 Buzzer

The buzzer is an integrated signal generator with fixed frequency, directly operating from the +5V logic power supply.
Activating and deactivating is controlled with the signal SPEAKER.

2.4 PCB Modem Supply CS_M

PCB Modem Supply CS_M generates a supply voltage of +8V dc, to operate a special GE Medical Systems Information Technologies modem direct on the RS-232 interface on the MAC1200 without the need of an external power supply for the modem.

The Voltage is generated by a switching regulator with current limit and thermal protection from the +26,5V (+UVERS).
The modem supply voltage +8V is accessible on Pin 6 of the RS232 interface.
The protection against ESD is realized with a Transzorb diode on the PCB Control CS_CI.

2.5 Internal interfaces

2.5.1 Mechanical interfaces

Mechanical interfaces are described in Section "1.2 Mechanical Components".

2.5.2 Electronic interfaces

This section describes the pinning, function and significance of the signals on the internal interfaces of the functional components.

2.5.2.1 Interface to the switching power supply

The interface to the switching power supply is realized by the connector POSUP/ on the PCB Control CS_CI.

Connector denotation: **POSUP/**

Type: male connector 1 X 4-pin., 180°, AMP MODU I

reverse terminal protection achieved mechanically.

The function of the individual pins is given in the following table . The definition as an input/output is seen with reference to PCB Control CS_CI.

POSUP/

Pin Number	Signal Name	input/output	Function	Definition
1	+24VPS	Input	Voltage from power sup.	+ 26,5V
2	+24VPS	Input	Voltage from power sup.	+ 26,5V
3	GNDPS	Input	GND from power supply	
4	GNDPS	Input	GND from power supply	

2.5.2.2 Interface to the PCB NC battery charge

This interface has the supply for battery charging, charging control and status signals and the battery voltage from the PCB NC battery charge.

Connector denotation: **BATT/**

Type: male multipoint connector 2x 10-pin, 180°

reverse terminal protection and coding with coding pin 15

The function of the individual pins is given in the following table. The definition as an input/output is seen with reference to PCB Control CS_CI.

BATT/

Pin Number	Signal	input/output	Function	Definition
1	+24V	Output	Supply battery charging	
2	+24V	Output	Supply battery charging	
3	+24V	Output	Supply battery charging	
4	Code		Coding Pin	
5	NC			
6	GND24V		common Ground	
7	GND24V		from power supply	
8	GND24V		after ferrite decoupling	
9	GND24V			
10	+UBATT	Input	Battery voltage	
11	+UBATT	Input	Battery voltage	
12	+UBATT	Input	Battery voltage	
13	+UBATT	Input	Battery voltage	
14	+UBATT_ME	Input	Battery measuring output	
15	Code		Coding Pin	
16	+5V_L	Output	+ 5V supply	
17	NC			
18	BATT_OPT_	Input	Status option battery	"0": option active
19	LOAD_OFF	Output	Charging reduction	"1": reduced charging
20	NC			

2.5.2.3 Interface to the LCD Graphics Display

The interface to the LCD graphics display provides the LCD data signals, the display supply voltages +5V and VEE, the display contrast voltage V0 and the display on/off control signal.

Connector denotation: **HOS/**

Type: Foil connector, 14- pin, zero power insertion, 180°

The LCD supply voltage VEE can be measured at R 731 on the PCB Control CS_CI, the LCD contrast voltage can be measured at R 730. Both levels of these voltages depend on the contrast selected.

The voltage supply for the CCFL tube of the display is provided separately via the connector **BL/.**
Caution! Do not touch! High AC voltage!

2.5.2.4 Interface to the keypad

The interface to the keypad is realized with the connector KEYB/. It contains the signals for the keypad rows and columns, the supply and the control signals for the status LEDs of the keypad. The foil connecting cable is part of the keypad itself.

Connector denotation: **KEYB/**

Type: Foil connector, 26- pin, zero power insertion, 180°,
grid 1.0mm, Molex

2.5.2.5 Interface to the printhead

The control data to the printhead is transferred via the flexible PCB Printhead Connection, plugged into the connector TPC_DAT/ on the PCB Control CS_CI.

Connector denotation: **TPC_DAT/**

Type: male connector 1x 20-pin, 180°

Printhead Supply

The printhead is supplied through a 6-pin connection cable, plugged to the connector TPC_PO/ on the PCB Control CS_CI.

Connector denotation: **TPC_PO/**

Type: multipoint connector 1 X 6 pin., 180°,
reverse terminal protection, MODU II

The function of the individual pins is given in the following table. The definition as an input/output is seen with reference to PCB Control CS_CI.

TPC_PO/

Pin Number	Signal	input/output	Function	Definition
6	COMMON		Supply Voltage +22,5V	
5	GNDITPC		Ground	
4	COMMON		Supply Voltage +22,5V	
3	COMMON		Supply Voltage +22,5V	
2	GNDITPC		Ground	
1	VDD1		Auxiliary Voltage	

2.5.2.6 Interface to the motor

The motor control signals are supplied through a 6-pin connection cable, plugged to the connector MOTOR/ on the PCB Control CS_CI.

Connector denotation: **MOTOR/**

Type: multipoint connector 1 X 6 pin., 180°,
reverse terminal protection, MODU II

2.5.2.7 Interfaces for production tests

Debug Port

The debug port is an interface for developing purposes. With the corresponding tools, the MPC821 can be set to the debug mode, to show internal states.

Connector denotation: **BDM/**

Type: male connector, 2x 5- pin, 180 °

JTAG Port

The JTAG is an interface for the production test of the processor core and the memory. In addition, the Flash memories can be programmed with this interface.

Connector denotation: **JTAG/**

Type: male connector, 2x 5-pin, 180 °, pin 7: coding pin

The function of the individual pins is given in the following table. The definition as an input/output is seen with reference to PCB Control CS_CI.

JTAG/

Pin Number	Signal	input/output	Function	Definition
1	TMS	Input	JTAG Test Mode Select	
2	TRST	Input	Reset for Scan Chain	"0": Reset active
3	TDI	Input	Data In for JTAG Mode	
4	TDO	Output	Data Out for JTAG Mode	
5	TCK	Input	Serial Clock for JTAG	
6	GND		Logic Ground	
7	**PORESET**	**Bi-direct**	**Power On Reset**	**"0": Reset active**
8	EN_BJHRES	Input	Enable buffered HRESET	"0": HRESET enabled.
9	**WE0_IORD**	**Bi-direct**	**Write Enable Flash**	**"0" : Write enable**
10	**WE1_PCDE**	**Bi-direct**	**Write Enable Flash lower**	**"0" : Write enable**

In Circuit Programming Port

With the In Circuit Programming Port, both CPLDs can be programmed or updated in a Daisy Chain queue.

Connector denotation: **ISP/**

Type: male connector, 2x 5-pin, 180 °, pin 4: coding pin

The function of the individual pins is given in the following table . The definition as an input/output is seen with reference to PCB Control CS_CI.

ISP/

Pin Number	Signal	input/output	Function	Definition
1	ISP_SCLK	Input	Serial ISP Clock	
2	GND		Logic Ground	
3	ISP_MODE	Input	ISP Mode Select	
4	Code		Coding pin	
5	ISP_EN	Input	Enable In Circuit program.	"0": ISP enable
6	ISP_SDI	Input	Serial Data In	
7	ISP_SDO	Output	Serial Data Out	
8	+5V		Logic supply	
9	NC			
10	NC			

2.5.2.8 Interface to PCB Modem Supply CS_M

The interface to PCB Modem Supply CS_M is realized by the connectors MO_SU/ and RS232_E/.

MO_SU/ delivers the voltage +26,5 for the modem supply generation, RS232_E/ receives the generated modem voltage +8V for the PCB Control CS_CI.

Connector denotation: **MO_SU/**

Type: multipoint connector 1 X 3 pin., 180°,

reverse terminal protection, MODU II

The function of the individual pins is given in the following table . The definition as an input/output is seen with reference to PCB Control CS_CI.

MO_SU/

Pin Number	Signal	input/output	Function	Definition
1	+UVERS	Output	Supply Voltage + 26,5V	
2	EN_MOSU	Output	Enable Modem Supply	Open, high: enable Low: disable
3	GND24V	Output	Ground	

Connector denotation: **RS232_E/**

Type: male connector, 2x 5-pin, 180 °

The function of the individual pins is given in the following table . The definition as an input/output is seen with reference to PCB Control CS_CI.

RS232_E/

Pin Number	Signal	input/output	Function	Definition
1	+5V	Output	Logic Supply	Reserved
2	+5V	Output	Logic Supply	Reserved
3	GND		Ground	
4	GND		Ground	
5	SMRXD1	Input	Receive (RXD)	Reserved
6	SMTXD1	Output	Transmit (TXD)	Reserved
7	GND		Ground	
8	**V_MODEM**	**Input**	**Modem Supply +8V**	
9	EKGTRIG_E	Output	ECG Trigger	Reserved
10	FERNST_E	Input	Remote Start Input	Reserved

2.6 Interfaces to peripherals

The MAC1200 has only 3 interfaces for peripherals:

- Mains input
- Patient input
- RS-232 interface

The **mains input** interface on the device is a 3-pin standard cold appliance socket connection, which is integrated into the mains input module. Connection to the mains is effected via a 3-pin power cord with a non-fused earth conductor.

The mains input is a wide range input from 95Vac ... 240Vac. The mains input module contains the two primary fuses.
When replacing these fuses, the following points have to be observed:

- replacement by factory or servicing agent only!
- disconnect mains plug!
- replacement only with the original fuses!

For the **patient input**, the mechanics of the patient input of the MAC500 is used, so the patient cables of the MAC1000/CardioSmart cannot be used for the MAC1200.

A 9-pin sub-D Connector, type Mark II with 4-40 UNC inserts, with a standard configuration of the signals TXD, RXD and GND is implemented in the construction of the **RS-232 interface**.

2.6.1 Electronic interfaces

2.6.1.1 RS-232 interface

The 9-pin sub-D Connector of the RS-232 interface is implemented on the PCB Control CS_CI directly.

From Version V1.1, the remote start input pin is available on pin 8.
In MAC1200 US devices the modem supply output +8V is available on pin 6 additionally.

Connector denotation: **RS232/**

Type: 9-pin sub-D, female, Mark II with 4-40 UNC inserts

The function of the individual pins is given in the following table. The definition as an input/output is seen with reference to PCB Control CS_CI.

RS232/

Pin Number	Signal	input/output	Function	Definition
1	NC			
2	RXDE	Input	RS232 Data In	
3	TXDE	Output	RS232 Data Out	
4	NC			
5	GND		Signal Ground	
6	**V_MODEM**	**Output**	**Modem Supply +8V**	**MAC1200 US only**
7	RTSE	Output	Request to Send	
8	**FERNST**	**Input**	**Remote Start Input**	**"0" : active**
9	NC			

2.6.1.2 Patient input

The connection to the patient cable is realized with a 15-pin female sub-D Connector, implemented on the PCB Control CS_CI directly. The mechanical plastic housing makes sure that for MAC1200 only released patient cables can be connected.

Connector denotation: **EKG/**

Type: 15-pin sub-D, female

EKG/

Pin Number	Signal	input/output	Function	Definition
1	C2	Input	chest lead V2	
2	C3	Input	chest lead V3	
3	C4	Input	chest lead V4	
4	C5	Input	chest lead V5	
5	C6	Input	chest lead V6	
6	Shielding	Output	shielding AVSS	
7	Cable	Input	Identification: patient cable used	"0": patient cable used
8	Cable identification	Input	5/10 -pin or 12 -pin cable used	"0": 12-pin cable "1": 5- or. 10-pin cable.
9	R (RA)	Input	electrode right arm	
10	L (LA)	Input	electrode left arm	
11	F (LL)	Input	electrode left leg	
12	C1	Input	chest lead V2	
13	NST	Input	Nehb electrode NST	
14	N (RF)	Output	electrode right leg	
15	NAX	Input	Nehb electrode NAX	

2.7 Software Updates

Software updating can be performed via RS232 with the Software **Download Kit part-No. 2000079-001**. The required connection cable and a description of the procedure is included in the kit.

2.8 Limitations

The following operating modes are not implemented in the MAC 1200

- No SAO2
- No spirometry
- No late potentials, no RR variability
- No phono, no US Doppler

A scope output is not available.

No analog inputs.

No ECG trigger output.

Lead acid accumulators cannot be used.

Primary cells cannot be used.

3 System test functions

All messages displayed during the self-test are in English.

3.1 General information

The functions for the system test are mostly menu-guided.

For complete execution some tests require special auxiliary resources. These include interface testers or PC, connection cables, signal generators, etc. The tests that are necessary are described in the various test descriptions.

3.2 Test start

After simultaneously pressing the keys

Shift + 12 Lead

the initial display menu appears to enable selection of a specific test. (see below)
The specific test functions are activated by pressing the corresponding key.

Hardware tests

1= Display test
2 = Keyboard
3= Motor test
4= Test results
5= Recording test
6= V24 tests
7= Time and date
8= Electrode test
D= Device model
N= Serial number
O= ACI-TIPI

X= End (Terminate hardware tests)

3.3 Display test

After pressing the **"1"** key the following menu appears:

Display test

(1) Test pattern
(2) Clear display
(3) Restore menu
(4) Inverse
(5) Display illumination
Contrast control
- Shift_Cursor_Down
- Shift_Cursor_Up

Terminate with any key

Pressing any other key than one of those listed in the menu above leads back to the initial display menu.

(1) Test pattern

Pressing this key generates a chessboard pattern. Each subsequent pressing generates the inverse display of its predecessor.

(2) Clear display

All display pixels are inactive

(3) Restore menu

The initial display test menu is displayed.

(4) Inverse

The contents of the existing display appear in reverse video.

(5) Display illumination

The illumination is switched on or off by pressing this key.

Contrast control
The contrast setting can always be adjusted as described above (cursor keys).

3.4 Keyboard test

By pressing the **"2" key** the following menu appears:

Key T e s t

B= Bleeper test

E= End

When a key is pressed this key or its function is displayed. This can either occur by a triple character display, e.g., "AAA" or as a text, e.g., "CURS_UP". Moreover, pressing the "B" key tests the bleeper (audible sound). The keys "ALT" and "SHIFT" only in combination with another key. The "E" key terminates this test and simultaneously undergoes a self-test.

3.5 Motor test

When the "3" key is pressed the following menu appears:

Motor Speed Test
- Speed selection key
- Start/Stop key

Terminate with any key

The speed select key is used to set the required speed and the motor is set into motion with Start/Stop.
A marking pulse is set once every second. The running speed can then be calculated or its accuracy checked from the distance between marking pulses. Any other key pressed not included in this menu leads to the initial display menu.

3.6 Test results

Pressing the **"4" key** triggers the output of the test results.

The output of the test protocol supplies the following information:

- Time and date
- Device serial number
- Device model
- Software release
- ECG time constant
- Battery voltage
- test results
- Memory used (ROM, RAM)
  - base address
  - size

Following output, the initial display menu reappears automatically.

The identification of the Hardware Version is given by the item "Remote Control yes/no".
"No" indicates Hardware Version V 1.0 (no remote control), "yes" indicates Hardware Version V 1.1 or V1.2

This message is intended only for the use of the individual or entity to which it is addressed. As it contains confidential information, any use distribution or copying is strictly prohibited if you are not the addressee.

3.7 Self-test

The test results elucidated in Section 3.6 are ascertained during the self-test, which is always performed on power-up. Should errors be detected, a message appears on the display after the test, indicating the possible errors. The following error codes are used to identify the error.

Error codes

The following error codes appear on the display together with the message "Self-test failed":

ERROR_CODES:
0 - reserved
1 VEKT - error in vector table
2 DRAM - DRAM error
3 SRAM - SRAM error
4 - reserved

5 - reserved
6 - reserved
7 - reserved
8 ROMB - ROM error (checksum) in the FLASH
9 - not used
10 - not used

3.8 Recording test

The recording test is activated by pressing the **"5" key**.

A window with 2 channels is displayed.

- speed select key: selects the speed
- start/stop key: starts and stops a real time 2 channel recording

The selected speed and sensitivity is displayed.

Terminate with any key.

3.9 V24 tests

Several possibilities are available to test the serial interface. Moreover, on the one hand, the signal transmission and receiving of the interface can be tested by an internal feedback from TXD and RXD and, on the other hand, the signal transmission and receiving with a remote station.

For the test with a remote station, the connection cable from MAC1200 to PC,
PN 223 362 03 is required. In addition, the following transmission protocol should be adjusted at the remote station:

1 start bit, 8 data bits, no parity
1 stop bit
Baud rate 19200

Pressing the **"6" key** calls up the following menu:

Interface test

1= Sending and receiving
2= Send test string to device
3= Send/Receive with device

A = Abort (terminate interface test)

(1) Sending and receiving
This test enables complete testing of the RS232 signal path for transmitting and receiving, including RS232 driver and connector.
This test requires an RS232 connector with an internal bridge from pin 2 (RXDE) to pin 3 (TXDE). Depending on the result of the test, the following message appears:

If test result is OK: Out :Hello world!
In :Hello world!

If an error occurs: Out :Hello world!
In : ERROR (In)

(2) Send test string to device
In this test a remote station, e.g., PC must be connected up and have a terminal program which can receive signals and be configured for the above-mentioned protocol. If the remote station is on receive, then every time the "2" key is pressed the test string "Hello world!" is transmitted to the remote station. Simultaneously, the following message appears on the display:

v24-Settings: "19200, 8, n, 1"

Out: Hello world!

(3) Send and receive with device
Sending and receiving can be tested with a remote device by pressing the "3" key. The device should be connected as described in (2).
After pressing the "3" key a test string is sent to the remote station. The following message appears on the display:

Transmitting: Hello world!

Receiving: [ ]

A subsequent input at the remote station is sent back to the device and displayed there. Moreover, it should be noted that an input must take place within 10 s and the input terminated with "return".

3.10 Time and date

This section deals with the quick checking and setting of the time and date.
Pressing the **"7"** key calls up the following display:

Time (hh:mm) [18:25:29]

and

Date (dd.mm.yyyy) [03.03.1999]

X = End

To set time or date, select the corresponding time or date field by pressing the return key.
During entering the numbers, a single cursor is not displayed.

3.11 Electrode test

The electrode test is started by pressing the **"8" key.**
The following menu is displayed:

Electrode test

Terminate with any key

Select pace electrode (key 'P')
Pace electrode LA

Cable = 10 electrodes (or no cable)

The status of each electrode is displayed. Electrode OK or disconnected is displayed as follows:

Status = 0 -> Electrode OK
Status = 1 -> Electrode disconnected

With the "P" key, the pace electrode can be selected. The selected pace electrode is displayed.

The status **"cable"** indicates if a cable is connected to the patient ECG input or not.

3.12 Time constant

From Software release V5.2 the time constant can no morenot be set in the service mode. Ist accessable in the user mode under "System Setup" (Allgemeine Einstellungen), Baseline roll filter (Nullienienfilter) 0.04Hz, 0.08Hz, 0.16Hz

3.13 Setting the device model

The setting of the device model is activated by pressing the **"D" key**, the following display image appears:

D e v i c e model

1=	INT	(not for use in the US)
2=	USA	
3=	Europe 2	(not for use in the US)
4=	Japan	(not for use in the US)
5=	RUSS	(not for use in the US)

X= End

Warning!

For use in the US, do not change the device model, which is configured during manufacture to device model "USA".

Changing the device model affects the selection of the output formats and languages available, can switch over the program for Interpretation. Also affected are the default configuration settings, e.g., override function yes/no, line filter 50/60 Hz.

The following table shows the most important combinations:

Device model	Inter-pretation	Output formats	Languages	Default settings	
				Override function enabled	Line filter
01 INT *[1)]	HEART	international	international	no	50 Hz
02 USA	**12SL**	**USA**	**e,f,s**	**yes**	**60 Hz**
03 Europe2*[1)]	12SL	international	international	yes	50 Hz
04 Japan *[1)]	12SL	international	e, jap	no	50 Hz
05 RUSS*[1)]	HEART	international	e,r	no	50 Hz

- Language international: ger, eng, fre, ita, spa, por, swe, nor, fin, dan, dut, czech, hung
- Europe 2: United Kingdom, Benelux, Scandinavia

*[1)] Not for use in the US

The device model is selected by pressing the appropriate key, **"1"** to **"5".**

Quit selection menu by pressing the **"X" key.**

Quit the self-test with **"X" key.**

MAC 1200 configures the appropriate items and initiates a cold start automatically. Thus, when the device is rebooted automatically all the new settings are adopted.

Note on saved ECGs when configuring the device model:

Saved ECGs are not lost.
If a new device model is selected, the program for Interpretation is switched over; however, when printing out the saved ECGs the display in the status line (12SL, or without in the case of HEART) is related to the currently enabled program for Interpretation, although the results are based on the program previously configured. In this case, the saved ECGs should be printed out or transferred to a PC before configuration of the new model.

3.14 Switching over the program for interpretation

This Point is not accessible when the US Device Model is selected!

Switching over the program for interpretation is activated by pressing the **"H" key**, the following display image appears:

Interpretation

1= HEART
2= 12SL

X= End

The currently enabled interpretation program appears in reverse video.

Warning!

Switching over to another program for Interpretation affects the measurement results and the interpretation!

The program for Interpretation configured during manufacture should only be changed when deemed really necessary!

The required program for Interpretation is selected by pressing the appropriate key, **"1"** or **"2".**

Quit the selection menu by pressing the **"X" key.**

Quit the self-test with the **"X" key.**
MAC 1200 configures the appropriate items and initiates a cold start automatically. Thus, when the device is rebooted automatically all the new settings are adopted.

Note on saved ECGs when switching over the program for Interpretation:
Saved ECGs are not lost.
After switching over to a different program for Interpretation when printing the saved ECGs the display in the status line (12SL, or without in the case of HEART) is related to the newly selected interpretation program, although the results are based on the program previously configured. In this case the saved ECGs should be printed out or transferred to a PC before switching over to the new program for Interpretation.

3.15 Pace enhance

From Software release V5.2 the Pace enhance mode can no more be set in the service mode. Ist accessable in the user mode under "System Setup" (Allgemeine Einstellungen), Pace Enhancement (Pace Markierung) YES or NO.

3.16 Serial number

The serial number of the device is displayed by pressing the **"N" key.**

The serial number is only displayed and cannot be changed.
The serial number is entered during the manufacturing process.

After replacing the PCB Control CS_CI, during the power up sequence, the serial number of the device has to be entered.

Terminate with the **"X" key.**

3.17 ACI-TIPI

Enable or Disable of ACI-TIPI functionality activated by pressing the **"O" key**, the following display image appears:

ACI-TIPI

1= ENABLE
2= DISABLE

X= End

NOTE

To **DISABLE ACI-TIPI** first it must be set to NO in the device user mode.
This must be done in the "Patient Data Setup" screen.
The answer to prompt "Chest Pain" must be set to "NO". !!!
If this is confirmed ACI-TIPI can be enabled in the Service Mode.

4 Repair instructions

4.1 Safety instructions

Repairs may only be conducted by approved specialist personnel.

Before opening the MAC 1200, switch off device and disconnect mains plug!
Never connect mains plug when the device is open!

Before replacing the primary fuses in the power input module, the device should also be switched off and the mains plug disconnected!

For replacing components, only the original GE Medical Systems Information Technologies components, mentioned in the spare parts list may be used!

When replacing electronic components implement **ESD protection.**
Return replaced PCBs in **ESD packaging** only.

Defective NC batteries or empty Li-batteries should be **disposed of in accordance with the applicable legal stipulations** or returned to the factory.
Batteries returned to the factory should be labeled **"For disposal"**.

4.2 Replacing components

For all the following points the safety instructions in Section 4.1. have to be observed!

Warning: The device has to be switched off!

Opening the device

To open the MAC 1200 release the 5 fastening screws on the underside of the device, open the paper feed flap, carefully raise the upper shell of the housing, disconnect keypad cable by opening the connector KEYB/ on the PCB Control.
The display remains in the lower shell of the casing.

During reassembly, ensure that no cables are pinched.

Replacing the primary fuses in the mains input module

Warning: Only use fuses indicated on the rating label! (see Section 8, Parts List)

Replacing the battery

Disconnect and lift out the battery compartment on the underside of the device by raising the middle fastening catch. Remove the battery and disconnect the battery plug BATT_IN/ from the PCB Battery Charge.

Warning: Only original GE Medical Systems Information Technologies batteries may be used! (see Section 8, Parts List)

Defective NC-batteries or empty batteries should be **disposed of in accordance with the applicable legal stipulations** or returned to the factory.
Batteries returned to the factory should be labeled **"For disposal"**.

Before putting in the new battery, insert plug BATT_IN/. Push in battery compartment, secure by pressing on the fastening catch.

Replacing the PCB Battery Charge

After opening the device, first of all open the battery compartment and disconnect the battery connector BATT_IN/ (see "Replacing the battery").
Then disconnect the connector BATT/ from the PCB Control. Undo the fastening screw next to the inductor L1 on PCB Battery Charge.
PCB Battery Charge has one soldered fuse:

SI 1: Battery fuse

No adjustments on the PCB Battery Charge are necessary.

Replacing the PCB Control

Before replacing the PCB, if still possible, printout the settings configured by the user and check the options enabled.

After opening the device first of all disconnect the plug-in connector POSUP/ to the power supply unit, and the connector BATT_IN/ from the PCB Battery Charge. Make sure that the connector BATT_IN/ makes no contact with the coated shell, while disconnected. Then

disconnect the remaining connectors to the recording unit. Undo the 6 PCBs fastening screws.

Check whether the connection LOET2 of the lithium battery for the real-time clock (BA1) is correctly soldered. Also check whether the connection LOET1 of the backlight inverter is soldered correctly.
Insert new PCB, fix the fastening screws and plug in connectors.

Connect keypad in the upper shell to connector KEYB/ and close connector on PCB Control and set the upper shell on to the lower shell. Tighten the 5 fastening screws.

Load the software via RS-232 interface with the Software Download Kit part No. 2000079-001.

Enter the device serial number.

If required, enter the option codes as described in the Operator's Manual.

Adjust the display contrast.

Setting the date and time (Section 3.10).

If known, adopt the user-programmed configuration; otherwise, default setting.

If known, reset the user-programmed time constants, otherwise setting to default of 2.04s (Section 3.1.12). Check the time constant by outputting the self-test results (Section 3.1.6).

Replacing the motor

After replacing the motor, no adjustment of speed is necessary. Nevertheless run the motor test (Chapter 3.5).

Replacing the graphics display

After opening the device first of all open connector KYO/ and release the flat ribbon cable of the display. Undo the screws of both plastic display holders, shift it 2 mm in the direction to the handle and lift up display and holders. Disconnect the plug HOS_BL/.
To re-assemble do vice-versa.

Adjust the contrast with the new display.

5 Troubleshooting tips

For all the following points the safety instructions in Section 4.1. have to be observed!

Device cannot be switched on even though power plug is plugged in

- *green power lamp LED is off and device cannot be switched on:*

  - Power cable defective or not plugged in correctly?
  - Primary fuses in the mains input module defective?
  - Connector from the mains input module to the mains switching power supply plugged in correctly, or cable defective?
  - Connector from the mains switching power supply to connector POSUP/ on the PCB Control plugged in correctly, or cable defective?
  - Keypad via connector KEYB/ on PCB Control plugged in correctly?
  - 26,5V on the connector POSUP?
    → if no: - *mains switching power supply defective*
    → if yes: - *PCB Control defective*
    - *or keypad defective*

- *green power lamp LED is on, but device still cannot be switched on:*

  → - *PCB Control defective*
  - *or keypad defective*

Device cannot be switched on when being battery-operated only

- *Is the battery depleted?*

  - Plug in power plug, green power lamp LED should glow and the device can be activated,
    → if not: - *refer to "Device cannot be switched on even though power plug is plugged in".*
  - By connecting the power plug, rapid charging is activated, LED1 on the PCB Battery Charge is activated
    → if not: - *PCB Battery Charge is defective*
  - With power plug plugged in, let unit charge for 10 minutes, then disconnect power plug. Can the device be switched on and can a recording be started?
    → if yes: - *Function OK., continue loading with plugged mains plug*
    → if not: - *Battery disconnected or cable defective?*
    - *Battery defective (no capacity)?*
    - *PCB Battery Charge defective (Si1?)?*

No display on the screen

- Does the yellow Stop LED on the keypad glow after the device is switched on?
  → if not: - refer to "Device cannot be switched on ...."
  → if yes: - continue
- Does a beep sound approx. 10s after switching on the MAC1200 occur (indicates the successful power up self-test)?
  → if not: - *Self test error, PCB Control defective*
  → if yes: - continue
- Contrast badly adjusted?
- Can the background illumination be activated by pressing a key?
- Can the display test in Section 3.3 be applied successfully?
  → if not: - *graphics display module defective*
  - *or PCB Control defective*

Error in self-test identified

When an error is detected during the self-test, in addition to the message "Self-test failed", the error code number and a short description also appear on the display. The meaning of the error codes is described in Section 3.7. The error codes refer to the PCB Control, and should be noted as information for the service center.

MAC 1200 fails to give printout, no paper transport

Perform the following test in the 6-lead operating mode:

- Paper available? Paper correctly inserted? Paper transport problems (jam)?
- Paper feed flap correctly engaged on both sides?
- After pressing the start key, the green start Led must glow
  → if not : - *keypad defective? Apply keypad test in Section 3.4*
  → if yes: - continue
- Paper feed flap correctly engaged on both sides?
- Mark reader defective or not plugged in?
- All connections for printhead and Motor are plugged in?
- Motor blocked ? (check roller, transmission)
- Operating only on battery which is strongly depleted?
  → if yes: - *plug in power plug*
  → if not: - *PCB Control defective*

Paper transport functions, no printout

- Paper feed flap correctly engaged on both sides?
- All connectors for printhead plugged in?
- Operation with strongly depleted battery?
  → if yes: - *plug in power plug*
  → if no: - *PCB Control defective*
  - *or printhead defective*

MAC 1200 only prints on the upper or lower section of the printout

- Paper feed flap is only engaged on one side.

MAC 1200 prints, but only baselines are printed out

- Electrodes applied correctly?
- Electrode cables plugged into the patient trunk cable terminal-box correctly?
- Patient trunk cable defective (e.g., RL defective)?
- Contact problems at the patient input connector of the MAC1200?
  → if not: PCB Control defective.

6 Adjustment instructions

For MAC 1200 no adjustment of components is required.

When PCB Control CS_CI, or the graphics display has been exchanged, the display contrast should be adjusted to an optimum contrast ratio as described in the user manual.

7 Servicing and maintenance

7.1 Technical inspection

A technical inspection is to be performed once a year. The following items, including the accessories used, are to be performed:

- Check device and accessories for mechanical defects, which impair their function.
- Perform a function check as detailed in Section 3 "System test functions".
- Check labels and inscriptions on the device relating to safety are clearly legible.
- Measure the Protective Earth Resistance (see Section 7.1.3 /7.1.3.2).
- Measure the enclosure Leakage Current (see Section 7.1.3 /7.1.3.3.1).
- Measure the patient leakage current (see Section 7.1.3 /7.1.3.3.2).

Warning!
The following checks may only be performed by persons whose training, knowledge and practical experience enable them to carry out such checks reliably and correctly!

Notes:
The operational and functional reliability of the device is checked using the following checklists.
They serve the experienced technician when checking the device.
A knowledge of device operation as detailed in the "Operator's Manual" is assumed.

The checklist items are based on the testing instruments given below.
The tests should be carried out using the customer's accessories, so that defective accessories are also detected automatically.
If other testing instruments are used besides those mentioned, the items on the checklist and tolerance specifications may need to be modified.

7.1.1 Visual check

Device and accessories are to be checked to ensure that
- fuse cartridges comply with vendor's specifications;
- labels and inscriptions on the device relating to safety are clearly legible;
- the mechanical state of the device permits its further use;
- there is no fouling which could cause any reduction in safety.

7.1.2 Test functions

7.1.2.1 Recommended testing instruments and accessories

1x Multi-parameter simulator Lionheart

1x RS232 interface connector with internal connection between pins 2 and 3 (TXD and RXD)

1x Patient trunk cable and customer electrode leads,
or 1X patient trunk cable, 10-pin 223 418 09
with 1 set of electrode leads (10 leads) with 4-mm plugs 420101-002

7.1.2.2 Test preparations

In general, the device test functions implemented in MAC 1200 are used for the tests.
These are described in Section "3. Device test functions".

Connect MAC 1200 up to the mains, the green LED for standby must glow.
Switch the device on, the self-test runs automatically, no error message should appear. When the self-test has finished the device is in the automatic mode, the yellow LED for still disabled operating mode must glow.

Modifications in the user-programmed configuration may need to be made in order to carry out the test. Should such a change need to be made to enable testing, make a printout of all the modified configuration lists and mark the changes made.

Important: After completing the test the original user-programmed configuration is to be retrieved and activated.

7.1.2.3 Operating and display unit performance tests

- Carry out the "Display test (1)" as detailed in Sections 3.3, respectively.
- Carry out the "Keypad test (2)" as detailed in Sections 3.4, respectively.

7.1.2.4 Test for recording speeds 25 and 50 mm/s

- Carry out the "Motor test " as detailed in Sections 3.5, respectively.
- Enable measurement marks by pressing the "A" key.
- The feed speed deviations should be less than 3%.

7.1.2.5 Device Test result check

- Output "Test results " as detailed in Sections 3.6, respectively.
  - Main parameters: - all memory stores free from error?
    - ASIC test O.K?
    - Sample rate 1000?
    - Printhead voltage > 18V, battery charge O.K?
    - Printout clearly legible and without any lapses or interference?

7.1.2.6 RS-232 interface test

Carry out the "Interface test " test item "(1) Transmitting and receiving", as detailed in Section 3.9, respectively.

7.1.2.7 Analysis of the ECG signals and HR value

Carry out the following settings on the ECG simulator:

- Amplitude 1 mV
- Heart rate (RATE) 60 bpm

Connect the electrode leads as indicated below:

RA	----->	RA
LA	----->	LA
LL	----->	LL
RL	----->	RL
V1	----->	V1
:	:	:
:	:	:
V6	----->	V6

Switch in **6 lead operating mode** and start recording by pressing the Start key.

By pressing the lead scrolling key, check whether all leads **are being recorded.**

The ECG traces must be **noise-free**.

Record one page in the "6-lead" operating mode. The following annotations must be present:

- Heart rate (top right)
- Lower status line
  - date and time
  - recording speed
  - sensitivity
  - active filter, e.g., 50/60 Hz, 40/20 Hz, ADS
  - frequency range of the recording

The **heart rate** of 60 bpm +/- 2 bpm appears on the display and is printed out on the recording.

Activate the square-wave function on the ECG transmitter at 1 mV.
Using the lead scrolling key select lead II. The square-wave pulse trace must correspond in **amplitude** with the displayed 1 mV reference pulse (applicable to named transmitter only).

Switch back to ECG signal on the ECG transmitter.
Start the recording in manual mode.
Increase the **heart rate to 200 bpm** on the ECG transmitter. The acoustic **warning signal** must sound for about 1s. Reduce the heart rate back to 60 bpm, the warning signal no longer sounds.

7.1.2.8 Pacemaker identification test

Make the following settings on the multifunction simulator:
- pace setting
- pace amplitude 6 mV
- pace duration 0.2 ms

Adjust "6-lead mode" on MAC 1200 device to be tested and select lead groups I, II and III.
Start the recording. The pace pulses must be visible as needles on the recording output.

7.1.2.9 Identification of disconnected electrodes

Reset the simulator to ECG signal at a heart rate of 60 bpm. Remove one electrode after the other from the ECG transmitter.

Activate the "12 lead" mode in the MAC 1200 device to be tested without activating it by pressing the Start key.
Check to ensure that each disconnected electrode is displayed correctly and that an acoustic alarm signal sounds.

7.1.2.10 Checking the charge status of the NC battery

The NC battery can, among other things, be checked as follows:
discharging the battery, followed by charging up completely (duration 4 h), followed by discharging in standby mode without recording.
If the operating time for this procedure is under 2.5 h, the battery should be replaced.

7.1.3 Safety Analysis Tests

7.1.3.1 General information

The suggested Safety Analysis Tests refer to the international standard IEC 601-1.
The tests are generally performed with Safety Testers, on most of them, the measuring circuits according IEC 601 are already implemented.
The following is a general description of the tests to be performed. For the handling of your Safety Tester follow the user manual.

The tests may be performed under normal ambient conditions of temperature, humidity and pressure and with line voltage.
The leakage currents correspond to 110 % of rated voltage for the tested unit. Most Safety Testers take this into account, otherwise the measured values have to be calculated.

Recommended Test Equipment

- Safety Tester for measurements according to IEC 601.
- Testing connector according to the following description.

7.1.3.2 Protective Earth Resistance Test

The power cord is to be included in the protective earth resistance test.
This test determines whether the device has a power ground fault.

- The protective earth resistance from power connector to any protective earth connected exposed conductive part is measured.
- Specs. of test circuit: AC current source 50 Hz/60 Hz of at least 10 A up to 25 A with limited output voltage of 6 V.
- If resistance is greater than 100 mOhm, the unit fails this test.

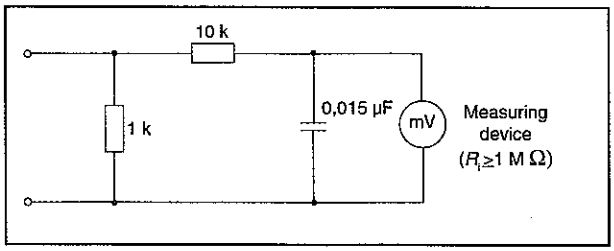

7.1.3.3 Measurement of Leakage Current

To perform the suggested measurements, the unit being tested has to be separated from any interconnection to a system. If the unit is part of a system, extended tests according to IEC 601-1-1 have to be performed. The following diagram shows the
Measuring Circuit [M] required for leakage current. The reading in mV corresponds to µA (leakage current). The Safety Testers generally work with this Measuring Circuit [M] and the displayed values are already converted to leakage current.

7.1.3.3.1 Enclosure Leakage Current Test

This test is performed to measure leakage current from chassis to ground during normal condition (N.C.) and single fault conditions (S.F.C.).
In all cases, the leakage current is measured from any exposed conductive parts to ground, the unit being tested has to be switched on and off.

Connect the unit being tested to your Safety Tester.

- During normal condition (N.C.), referring to the electrical diagram, measurements have to be done under the following conditions:

*	Polarity switch	Norm and RVS
*	GND switch	GND closed
*	S1	closed and open

- During single fault conditions (S.F.C.), referring to the electrical diagram, the measurements have to be done under the following conditions:

*	Polarity switch	NORM and RVS
*	GND switch	GND open
*	S1	closed

Test has failed if the measured values are greater than:

N.C.	S.F.C
100 µA	500 µA
	300 µA (UL requirements)

Electrical Diagram for Enclosure Leakage Current Test

7.1.3.3.2 Patient Leakage Current Test

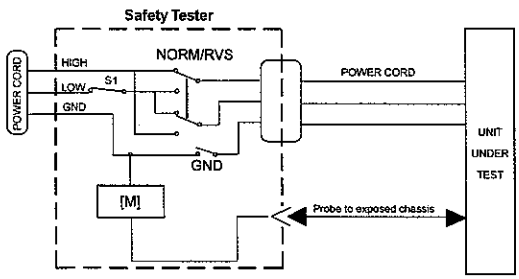

This test performs a leakage current test under single fault conditions (S.F.C.) depending on domestic power outlet of 115 or 230 V AC as source into the floating inputs.

In all cases, the leakage current is measured from input jack of the unit being tested to ground.

Connect the unit being tested to your Safety Tester.

- Referring to the electrical diagram, measurements have to be done under the following conditions:

*	Polarity switch	NORM and RVS
*	GND switch	GND closed
*	S1	closed

Test has failed if the measured values are greater than 50 µA.

Electrical Diagram for Patient Leakage Current Test

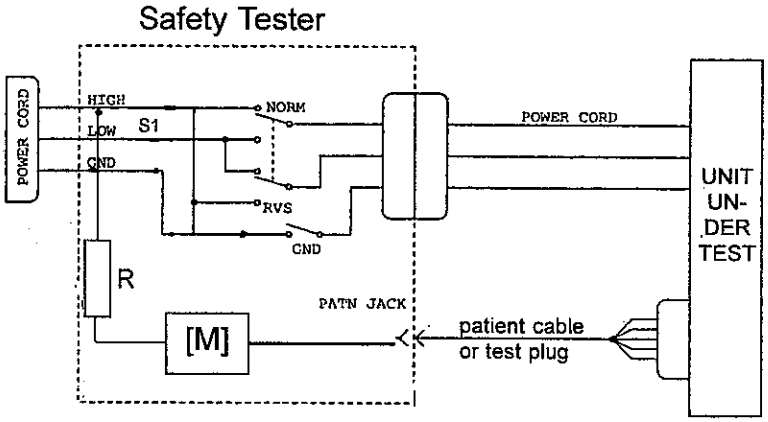

For the protection of the test person, the following values of resistor R may be used:

Type BF	22 kOhm (120 to 130 V)
	47 kOhm (220 to 240 V)
Type CF	100 kOhm (220 to 240 V)

7.2 Maintenance, cleaning, disinfection

MAC 1200 maintenance, cleaning, disinfection is performed in accordance with the MAC 1200 "Operator's Manual", Section 11, "Cleaning, disinfection and maintenance", as applicable.

Applications requiring extensive recordings may result in deposits on the thermal array printhead which normally do not, however, have any adverse effect on the printing quality. This can be removed with a soft, fluff-free cloth soaked in an alcohol-based cleaning agent (e.g., surgical spirit).

8 Parts List

Partnumber			Description	
MAC 1200				
10116821	MAC 1200	(int.)	Basic unit with Battery	without Pump
10116822	MAC 1200	(int.)	Basic unit with Battery	with Pump
10116823	**MAC 1200**	**(USA.)**	**Basic unit with Battery**	**without Pump**
10116827	MAC 1200	(Russ.)	Basic unit with Battery	without Pump
10116828	MAC 1200	(Russ.)	Basic unit with Battery	with Pump
10116829	MAC 1200	(europe2)	Basic unit with Battery	without Pump
10116830	MAC 1200	(europe2)	Basic unit with Battery	with Pump

User Manual MAC 1100 / 1200

22749201	User Manual MAC 1100 / 1200 / 1200 ST	German
22749202	User Manual MAC 1100 / 1200 / 1200 ST	English
22749203	User Manual MAC 1100 / 1200 / 1200 ST	French
22749204	**User Manual MAC 1200**	**English,USA**
22749205	short Manual MAC 1100 / 1200 / 1200 ST	Italian
22749206	short Manual MAC 1100 / 1200 / 1200 ST	Spanish
22749207	User Manual MAC 1100 / 1200 / 1200 ST	Russian
22749208	User Manual MAC 1100 / 1200 / 1200 ST	Swedish
22749209	short User Manual MAC 1100 / 1200 / 1200 ST	Portuguese
22749210	short User Manual MAC 1100 / 1200 / 1200 ST	Norway
22749211	short User Manual MAC 1100 / 1200 / 1200 ST	Danish
22749212	short User Manual MAC 1100 / 1200 / 1200 ST	Finnish
22749213	short User Manual MAC 1100 / 1200 / 1200 ST	Dutch
22749214	short User Manual MAC 1100 / 1200 / 1200 ST	Hungarian
22749216	short User Manual MAC 1100 / 1200 / 1200 ST	Czech.
22749218	short User Manual MAC 1200	Japanese

Service Manual

22749221	**Service Manual USA. for MAC 1200**
22749220	Service Manual International for MAC 1100/1200/1200 ST

Housing Parts

43252578	Under -case shell
92401714	Rubber foot
43252198	Battery cover

Upper Case for MAC 1200

2000074-001	Upper case with keypad and filter pane	(Russ.)
2000075-001	Upper case with keypad and filter pane	(Int.)
2000076-001	**Upper case with keypad and filter pane**	**(USA)**
2000077-001	Upper case with keypad and filter pane	(Europe 2)

2000088-001	Filter pane complete with glue frame
43252554	Sign GE Medical Systems Information Technologies
43252555	Sign GE Medical systems
43252560	Instrument Label MAC 1200
30344319	Handle
41611818	Leaf Spring
92916645	Luer- connection (female)
92916648	Luer Nut
92916654	Luer-cap
43252566	Filler Panel
43252567	Connector Pan

Recorder Parts

2000078-001	Drive Flap complete with Gearwheels and Roller
48015967	Gearwheel assembled on Roller
48015969	Gearwheel assembled on Motor
48015966	Gearwheel big, assembled between Roller and Motor
2009848-001	Motor Update Kit (replace Motor part no 30344746)
43252213	Cover plate for Motor
30343829	Mark Reader old. Used up to **S/N 101082178**
2001495-001	Mark Reader new. Used from **S/N 101082179** and higher
30344271	Thermal Printhead
38802910	PCB Printhead connection
43252209	Plastic holder for Printhead left side
43252210	Plastic holder for Printhead right side
41515439	Pressure spring for Printhead
50465725	Metal Tube
50465774	Contact Plate
50465726	Press Strip

Keypads MAC 1200

39000200	Keypad International
39000201	Keypad Europe2
39000202	**Keypad USA**
39000203	Keypad Russ.

Electronic components / PCBs

91541936	Line filter with fuse holder
30344270	Battery
38803290	PCB Battery charging
93011858	PCB. Power Supply
2000070-002	Spare PCB. Control with remote start for MAC 1100
2000071-002	Exchange PCB. Control with remote start for MAC 1100
2000072-002	Spare PCB. Control with remote start for MAC 1200 (backward compatible for all versions)
2000073-002	Exchange PCB. Control with remote start for MAC 1200 (backward compatible for all versions)
2000771-001	**PCB Modem Supply CS_M (US only)**
91208449	Fuse T 1,25 A
92916717	Battery 3 V 0.255 Ah
30344291	Pump 12 V (Standard)
38803125	PCB. Pump

Display-Module Graphics

2007630-001	Assy LCD-Modul Graphic (replace display part no 93011717)
43252565	LCD Holder right side
43252564	LCD Holder left side

Wire Set

38327399	Wire set for MAC 1100/1200
38327409	Wire for pump to PCB.mainboard
2001795-001	**Wire from PCB Modem Supply to PCB mainboard (US only)**

Connection cable (for MAC 1200)

22336203	Connection cable from MAC 1100/1200 to CardioSys/Soft
22337801	Connection cable from MAC 1100/1200 to Modem 9- pin connector
22337802	Connection cable from MAC 1100/1200 to Modem 25- pin connector
22337804	Connection cable from MAC 1200 to Modem 25- pin with supply

Service Tool

2000079-001 Software download kit, including connection cable to PC.

Release Software Package

2000284-006	Software Package for MAC 1100 Version V5.2
2000285-006	Software Package for MAC 1200 / 1200 ST Version V5.2
2000285-007	Software Package for MAC 1200 / 1200 ST Version V5.21

9 Specifications

Recording

Direct recording of waveforms and alphanumeric characters with rectangular coordinates by means of thermal-array printhead printing on thermosensitive paper.

- 3 or 6 recording channels, or 12 in 12 Lead Mode, overlapping
- baseline pitch 3 channels: 62 mm (arrhythmia) 6 channels: 31 mm (6 Lead)
  12 channels: 16 mm (12 Lead.)
- writing width 200 mm max.
- annotation of recorder settings, date, time and entered patient name in the margin of the recording strip
- with appropriate software, documentation of analysis results in the respective operating mode
- resolution of the recording:
  vertical 8 dots/mm
  horizontal 25 µm at 25 mm/s

Printer paper

Marquette CONTRAST Z-fold pad , 150 pages per pad, equivalent to a chart length of approx. 45 m

paper width: 8.5 inch

sheet length: 11 inch

To prevent damage to the printhead use only the original Marquette CONTRAST paper or the Marquette thermal paper with queue holes or marks.

Paper transport

- paper speed
  5-25-50 mm/s, key selectable
  error limits at 25 and 50 mm/s, typ. ±l%
  at 5 mm/s, ±10% max.
- At paper end, the recorder emits an audio signal and stops recording
  the last pages of the pad bear a colored stripe in the lower margin

Membrane keypad

Pushbuttons with tactile feedback

- function keys for all routine operations
- alphanumeric keyboard for entry of text

Display

graphics display with 24 x 40 characters, contrast adjustment

resolution of 320 x 240 pixels with display backlighting

Indicators (LED's)

For mains power, battery status and start/stop function

Automatic functions

They assist and facilitate operation by

- automatic control of lead selection, paper feed, calibration (configurable)
- report formatting (configurable)
- automatic baseline adjustment
- anti-drift system (cubic spline) compensating for polarization voltage fluctuations (configurable)

Detection of pacer pulses

- pulse length between 0.1 and 2.5 ms
- pacer pulse marker independent of pulse polarity
- pulse amplitude between ± 5 mV and ± 700 mV

Heart rate indication

derivation of the heart rate from all ECG signals

- display range between 30 and 300 bpm
- display update with every heart beat, maximum every 2 seconds

Signal inputs

isolated patient signal input, IEC type CF, high-voltage protection for all lead connections and neutral electrode, interference compensation via neutral electrode, monitoring for open leads

- electrode connections for RA, LA, LL, LA, VI to V6

- input impedance for differential signals between any two electrode connections > 10 MΩ at 10 Hz
- input impedance for common-mode signals referred to neutral electrode > 50 MΩ up to 60 Hz
- dynamic range for differential signals between any two electrode connections for AC voltage ±10 mV, for superimposed DC voltage (polarization voltage) ±600 mV
- dynamic range for common-mode signals referred to neutral electrode ±l V, referred to chassis 263 V AC (rms.)
- quiescent input current via any electrode connection for l kΩ termination referred to neutral electrode < 50 nA
- patient leakage current (rms values) according to IEC, class CF: in normal condition < 10 µA, in single-fault condition (e.g. patient in contact with line voltage) < 20 µA
- non-destructive range for lead-electrode connections and the neutral electrode connection referred to neutral electrode ±50 V, referred to chassis ±1500 V
- pulse voltage resistance of all lead electrode connections and of the neutral electrode connection referred to chassis (either polarity, e.g. defibrillation) 5000 V
- monitoring of each electrode for open leads: RA, LA, LL, RL, Vl, V2, V3, V4, V5, V6
  audio signal at printer start

Data interface

one serial RS232 interface for exchange of data with suitable external devices and software handshake

RS232 interface (standard V.24 interface):

- input voltage range. ± 15V max.
- output voltage range ±5 V min.

interface protected from electrostatic discharge for ±10 kV max.

Pin assignment of data port

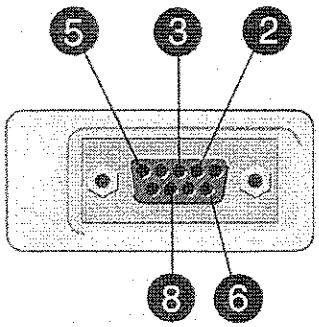

2 RXDE

3 TXDE

5 circuit reference

6 Modem Supply

8 Remote Start Input

Remote Start (hardware)

Paper feed via remote control connection (depending on selected operating mode). External make contact referred to chassis via circuit reference:

- source impedance Ri < 300 Ω
- contact dwell > 100 ms
- non-destructive load ±10V
- ESD interface protection up to ± 10kV

Signal Transmission

Patient input to recording

After lead formation and digitization, simultaneous transmission of all electrode signals to the digital processing system; muscle filter, AC filter, pacing pulse identification, automatic or manual sensitivity adjustment, automatic baseline adjustment and drift compensation by means of the anti-drift system (A.D.S.) can be enabled or disabled simultaneously for all channels; digital output of processed signals via thermal-array printhead.

- low cut-off frequency (-3 db limits) 0.08 Hz, equivalent to a time constant of 2.04 s
- high cut-off frequency (3 dB limits) operating mode: 12 Lead, 6 Lead 150 Hz (IEC/AHA) operating mode: Arrhy 100 Hz (IEC)
- signal sampling rate: 1000/s
- resolution, referred to the input 5 μV
- output rate to recorder 2000/s

- for all leads, gain adjustment in four steps:
  40-20-10-5 mm/mV
- with active muscle filter (low-pass characteristic) 3-dB drop of the amplitude frequency response at approx. 40 or 20 Hz
- with active AC line filter detection and compensation of periodic 50 or 60 Hz frequency components (depending on recorder model) attenuation >40 dB
- non-linear distortion below values specified in IEC and AHA recommendations
- coincidence error limits between any two channels ±0.5 mm
- detection of pacer pulses in V2 or other V leads and marking in all channels for signals referred to patient input:
  duration ≥ 0.1 ms, amplitude > 5 mV
- noise in the signal transmission path below values specified in IEC and AHA requirements:
  ≤ 2.5 µV rms
- common-mode rejection for 50 or 60-Hz signals (depending on recorder model) with AC filter switched on >140 dB

ECG calibration

automatic recording of a defined voltage step, valid for all channels

- calibration voltage, referred to ECG signal input: I mV
  calibration pulse width on recording depends on paper speed
  25 mm/s: 5 mm
  50 mm/s: 10 mm
  5 mm/s: 1 mm

Automatic ECG gain adjustment

The gain automatically adapts to the incoming signal. The maximum amplitude of the lead group or of all leads determines the gain setting.

- automatic adjustment range 5 to 40 mm/mV
- amplitude range (6 channels) 18 to 31 mm

Baseline

automatic adjustment of the baseline to the optimal recording range, in dependence of the signal amplitude

Anti-drift system (ADS) (cubic spline)

automatic compensation of baseline fluctuations caused by polarization voltage fluctuations at the lead electrodes (delay in recording: 4.2 s)

ECG storage

in 12 Lead Mode, storage of up to 40 ECGs

- stored ECGs can be deleted (individually or all in one pass), printed, transferred, and patient data can be edited
- when memory is full user is informed of the possible actions

Blocking

rapid charge reversal of the coupling capacitors in the preamplifiers after electrode application ensures that the baseline is quickly restored to its original position after overranging

Electrode monitoring

audible and visual indication on the LCD of disconnected electrodes or line break; each single electrode is monitored

Text input

patient and user data as well as comments can be entered via the panel keyboard and are annotated on the recording strip

Copy function

after ECG recording in 12 Lead Mode, copies of the ECG can be printed from memory and/or transferred to a MUSE CV system (configurable)

Test

automatic performance test upon power up, including verification of the signal path starting at the signal input

stored test ECG data for demonstration of the device functions

Power supply

from the power line or from a built-in rechargeable battery, automatic switchover; automatic battery charging during line-power operation from integrated AC adapter module

Mains operation

- instrument design in protection class I according to IEC 601-1
- **Rated voltage range** **95 to 240 V**
- operating voltage range 85 to 264 V,
  49 to 65 Hz
- rated current: 0.2 ... 0,6 A
- fuse 2 x T 1.25A, 5x 20
- typical power consumption
  battery charging 14 W
- max. power consumption 29 W

Battery operation

- type: nickel-cadmium
- rated battery voltage 18 V
- rated battery capacity 1.3 Ah
- fully charged battery sufficient for up to 50 12 Lead Mode, 1-page ECGs, if unit is only switched on to record the ECGs
- battery charge time approx. 4 hours
  (min. charge time for one 12 Lead Mode ECG: 10 minutes)
- battery life approx. 2 to 3 years, replacement by service only
- lithium battery for built-in clock, battery life approx. 5 years, replacement by service only

Operational readiness

After successful self-test, approx. 10 s after power-up

Operating position

horizontal

Environment

Operation

- temperature between 50 and 104 °F

- relative humidity between 25 and 95%
- atmospheric pressure between 700 and 1060 hPa

Transport and storage

- temperature between -22 and +140 °F (including battery)
- relative humidity between 25 and 95%
- atmospheric pressure between 500 and 1060 hPa

Recorder dimensions

- width 14.5 in.
- height 3.7 in.
- depth 12.6 in. (incl. handle)

Weight

- approx. 12.3 lb (with battery)

10 Device Documents

The following documents are enclosed:

Assembly drawing:	101 168 01 ... 36
Entire Instrument wiring specification	101 168 01 ... 36 S, sheet 1
Master Record Index, version V1.1	101 168 01 ... 36
PCB Control CS_CI	388 032 67 P, sheet 1/10 ... 10/10 388 032 67 R, sheet 1
PCB Battery Charge CS_CI	388 032 90 P, sheet 1 388 032 90 R, sheet 1
PCB Modem Supply CS_M	2000772-001, sheet 1 (P-Plan) 2000771-002, sheet 1 (R-Plan)

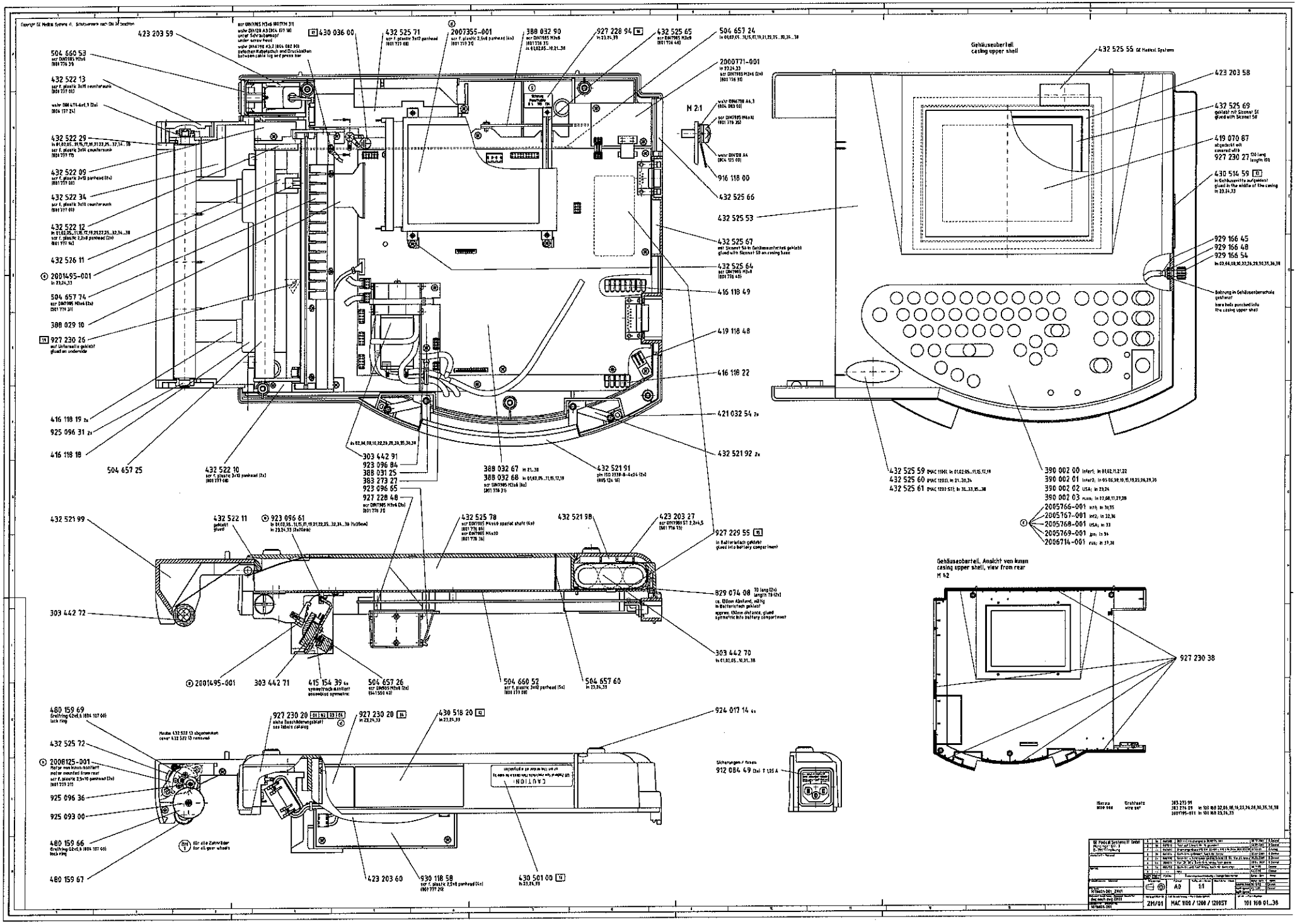

Gehäuseoberteil
casing upper shell
Gehäuseoberteil, Ansicht von innen
casing upper shell, view from rear
M 1:2
M 2:1
423 203 59
430 036 00
432 525 71
2007355-001
388 032 90
927 228 94
432 525 65
504 657 24
504 660 53
432 522 13
432 522 29
432 522 09
432 522 34
432 522 12
432 526 11
2001495-001
504 657 74
388 029 10
927 230 26
416 118 19
925 096 31
416 118 18
504 657 25
432 522 10
303 442 91
923 096 84
388 031 25
383 273 27
923 096 65
927 228 48
388 032 67
388 032 68
432 521 91
432 521 92
421 032 54
416 118 22
419 118 48
416 118 49
432 525 64
432 525 67
432 525 53
432 525 66
916 118 00
2000771-001
432 525 55
423 203 58
432 525 69
419 070 87
927 230 27
430 514 59
929 166 45
929 166 48
929 166 54
432 525 59
432 525 60
432 525 61
390 002 00
390 002 01
390 002 02
390 002 03
2005766-001
2005767-001
2005768-001
2005769-001
2006714-001
432 521 99
432 522 11
923 096 61
432 525 78
432 521 98
423 203 27
927 229 55
829 074 08
303 442 72
303 442 70
2001495-001
303 442 71
415 154 39
504 657 26
504 660 52
504 657 60
927 230 38
480 159 69
432 525 72
2008125-001
925 096 36
925 093 00
480 159 66
480 159 67
927 230 20
927 230 20
430 518 20
924 017 14
423 203 60
930 118 58
430 501 00
912 084 49
Sicherungen / fuses
Hinweis
Grabtaste
Wire set
383 273 99
383 274 09
2H/01
MAC 1100 / 1200 / 1200ST
101 168 01...38

Copyright GE Medical Systems IT. Schutzvermerk nach DIN 34 beachten

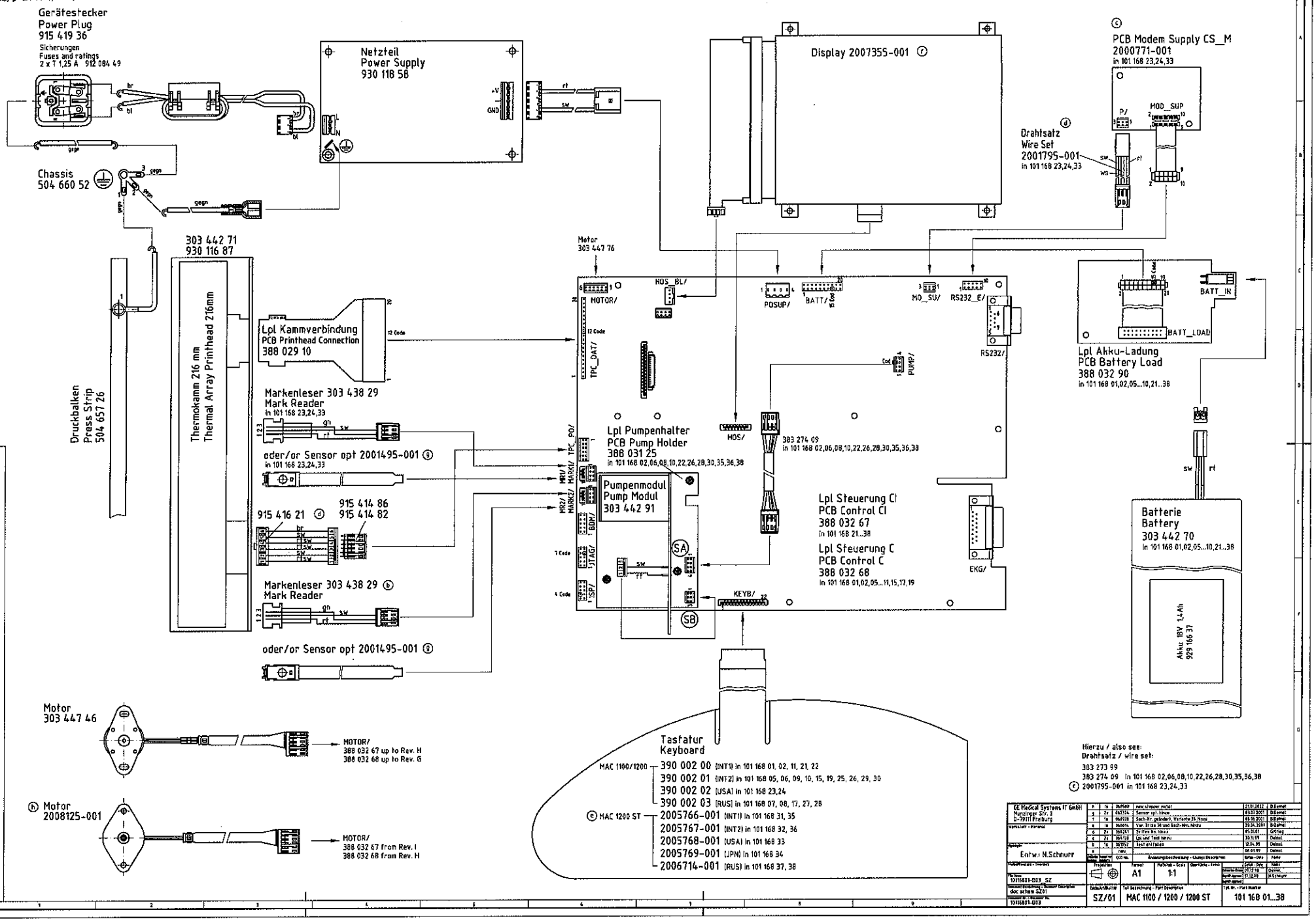

Diese Tabelle definiert die gültigen Konfigurationen des MAC 1100/1200/1200ST Version 1.2
This table defines the valid configurations of the MAC 1100/1200/1200ST Version V1.2

Komponente / Component			Sach-Nr. / Part No.	Index (Prod.)	Referenz / Reference	kompatibel(Service) / Compatible(Service)	in Variante / in Device Variation
Steuerung CS_C	Lpl Steuerung CS_C	PCB Control CS_C	388 032 68	H		B,C,D,E,G	01,02,07...11 17,19
	Ersatzteil-Nr.	Spare Part No.	2000070-002				
	Austausch Nr.	Replacement No.	2000071-002				
Steuerung CS_CI	Lpl Steuerung CS_CI	PCB Control CS_CI	388 032 67	I		C,D,E,F,H	21..24 27..38
	Ersatzteil-Nr.	Spare Part No.	2000072-002				
	Austausch Nr.	Replacement No.	2000073-002				
Akku-Ladung CS_CI	Lpl Akkuladung CS_CI	PCB Battery Charge CS_CI	388 032 90	D		B,C	01,02,07...10 21..24,27..38
	Ersatzteil-Nr.	Spare Part No.	-				
	Austausch Nr.	Replacement No.	-				
Netzteil Power Supply	Lpl SNP-9549-MH	PCB SNP-9549-MH	930 118 58	A			01,02,07...11 17,19 21..24,27..38
Remarks Index A :	Skynet Netzteil SNP-9549-MH						
Modem Supply	Lpl Modem Supply CS_M	PCB Modem Supply CS_M	2000771-001	A			23,24,33
	Ersatzteil-Nr.	Spare Part No.	-				
	Austausch Nr.	Replacement No.	-				
Pumpenmodul:			303 442 91	A			
	Lpl Pumpe	PCB Pumpe	388 029 18	B , C			02,08,10, 22,28,30,35,36,38
	Ersatzteil-Nr.	Spare Part No.	-				
	Austausch Nr.	Replacement No.	-				
	MAC 1100 V1.2						01,02,07...11,17,19
	MAC 1200 V1.2						21..23,27..30
	MAC 1200 ST V1.2						31..38
Software MAC 1100							
	Software Code SW_MAC 1100 V5.2		2000252-005				01,02,07...11,17,19
	Ersatzteil-Nr.	Spare Part No.	2000284-006				
	Austausch Nr.	Replacement No.	-				
Software MAC 1200 / 1200 ST							
	Software Code SW_MAC 1200 V5.21		2000253-006				21..23,27..38
	Ersatzteil-Nr.	Spare Part No.	2000285-007				
	Austausch Nr.	Replacement No.	-				

GE Medical Systems IT GmbH
Munzinger Str. 3
D-79111 Freiburg

And.Index Revision	kommt vor numbers	ECO No.	Änderungsbeschreibung - Change Description	Datum - Date	Name
l	-	068588	388 032 67 von H auf I, 388 032 68 von G auf H	21.01.2002	B.Deimel
k	-	067494	388 032 67 von F auf H, 388 032 68 von E auf G	01.08.2001	B.Deimel
j	-	067169	Variante 24 hinzu	06.06.2001	B.Deimel
i	-	066014	MAC 1100/1200 V1.2, SW 5.2	17.04.2001	B.Deimel
h	-	066534	Index bei 388 029 18 von B auf C	05.03.01	Koch
g	-	064150	MAC1100/1200 V1.1	11.01.00	G.Kaltenbach
f	-	063901	Schutzschaltung V9	13.12.99	G.Kaltenbach
e	-	062727	Software Release V5.02	08.07.99	G.Kaltenbach

Werkstoff - Material

Rohteil

Freimaßtoleranz - Tolerance

File Name: 10116801-D04__SZ02

Dokument Bezeichnung - Document Description: doc schem SZ02

Dokument Nr. - Document No.: 10116801-D04

Projektion

Format: A4

Maßstab - Scale: 1:1

Oberfläche - Finish

	Datum - Date	Name
Entworfen-Drawn	08.03.99	G.Kaltenbach
Geprüft-Approved	08.03.99	N.Schnurr
Geprüft-Approved		

Zeichn.Art/Blatt Nr.: SZ/02

Teil Bezeichnung - Part Description: Master Record Index MAC 1100/1200/1200ST V1.2

Teil Nr. - Part Number: 101 168 01..38

Copyright GE Medical Systems IT
Schutzvermerk nach DIN 34 beachten

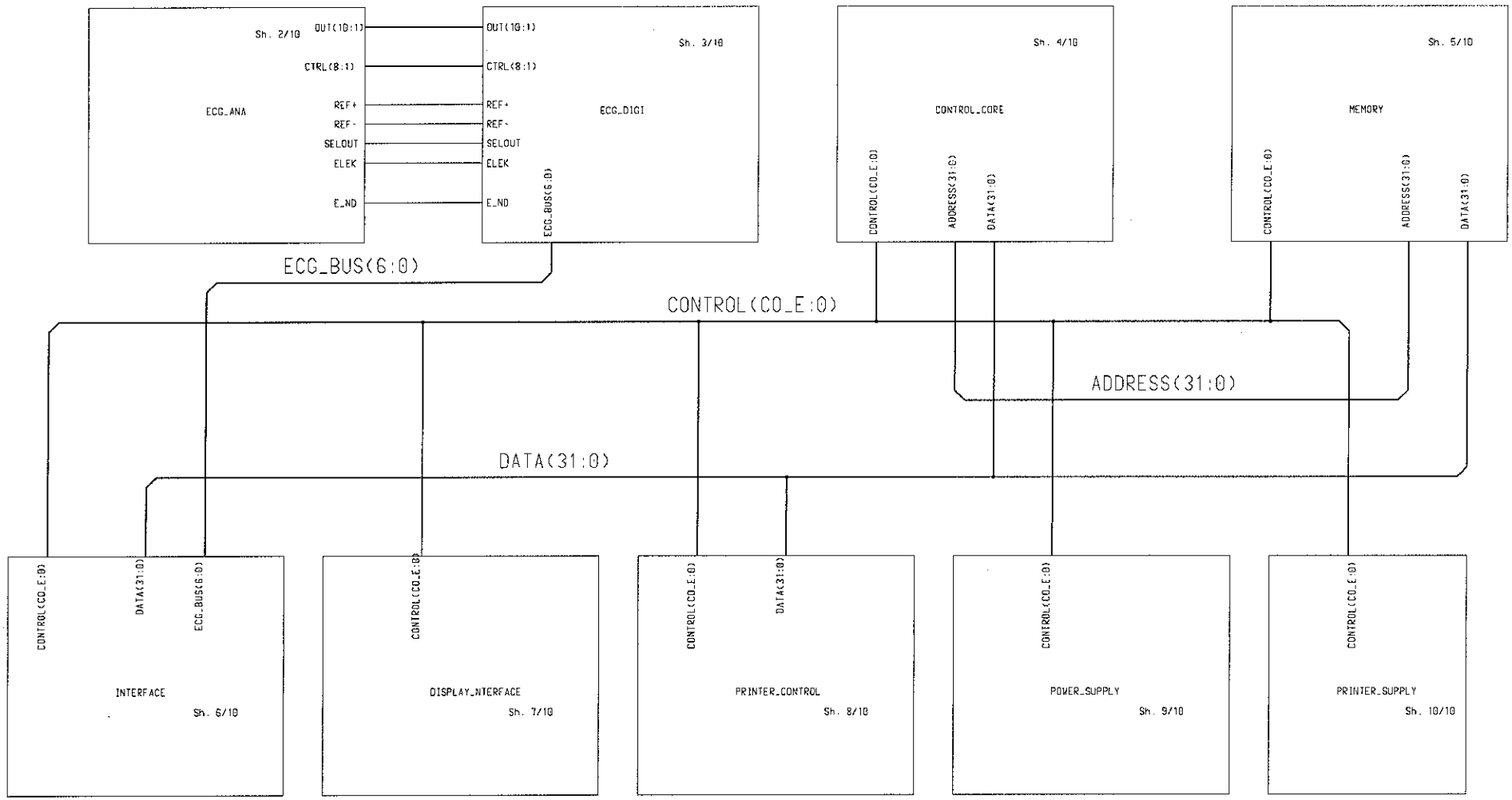

Schutzvermerk nach DIN 34 beachten

Marquette Hellige GmbH D-79007 Freiburg						388 032 67 -D01	Sheet: 1 of 10
Not equipped in Version		REVISIONS Revision-No	Index	Date / Name	A03	F67252	SCHEMATIC
x1	388 032 67	------	A	25.09.98/NTS		Date / Name	
x2	388 032 68	ECO-062920	B	13.01.00/NTS	DRAWN	12.02.99 / NTS	STEUERUNG CS_CI
x3		ECO-065096	C	26.03.01/MLB	APPROVED	09.03.98/NTS	
x4							
x5					ISSUED	N. SCHNURR	

[1997, 8, 11, 2]
$USER_CAE_Bisardlosmart_cirdes.gn

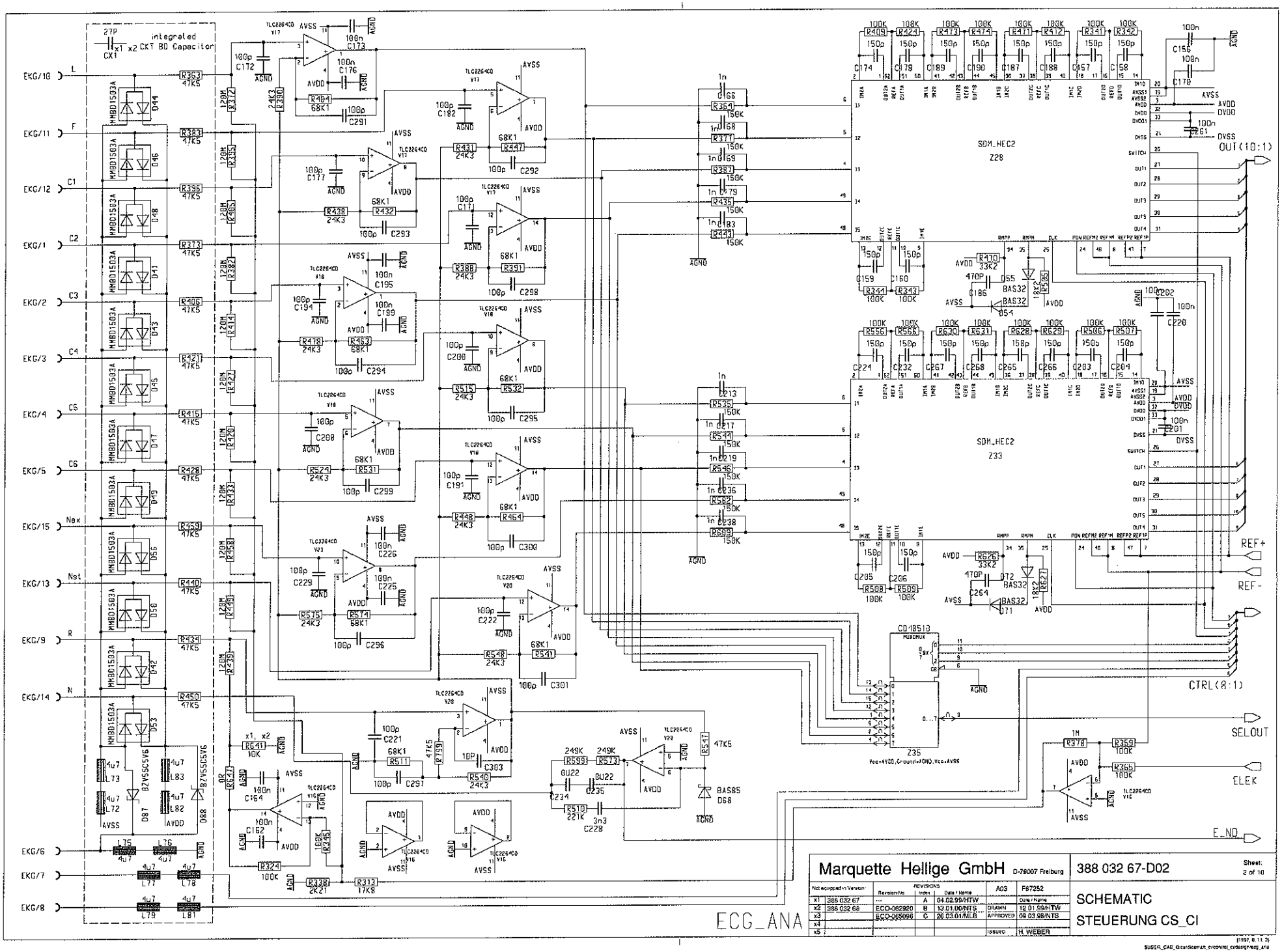

Schutzvermerk nach DIN 34 beachten

Marquette Hellige GmbH D-79007 Freiburg						388 032 67-D02	Sheet: 2 of 10
Not equipped in Version		REVISIONS Revision-No	Index	Date / Name	A03	F67252	SCHEMATIC
x1	388 032 67	---	A	04.02.99/HTW		Date / Name	STEUERUNG CS_CI
x2	388 032 68	ECO-062920	B	13.01.00/NTS	DRAWN	12.01.99/HTW	
x3		ECO-065096	C	26.03.01/MLB	APPROVED	09.03.98/NTS	
x4							
x5					ISSUED	H. WEBER	

(1997, 8. 11. 2)
SUSER_CAE_Bicardiceman_cvcontrol_cvdesign/ecg_ana

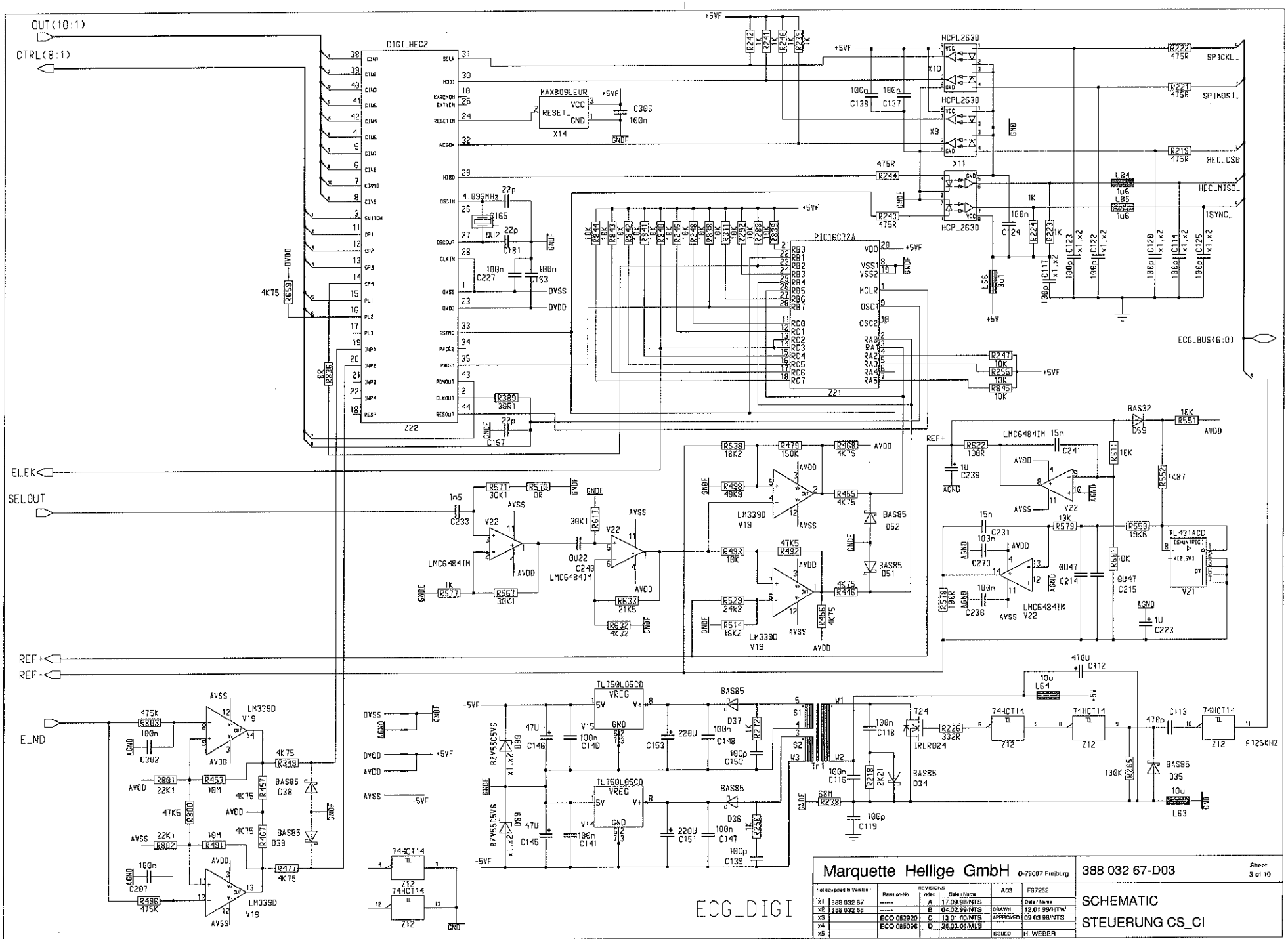

Marquette Hellige GmbH D-79007 Freiburg

388 032 67-D03

Sheet: 3 of 10

SCHEMATIC

STEUERUNG CS_CI

Not equipped in Version		Revision-No	Index	Date / Name
x1	388 032 67	------	A	17.09.98/NTS
x2	388 032 68	------	B	04.02.99/NTS
x3		ECO 082920	C	13.01.00/NTS
x4		ECO 085096	D	26.03.01/MLB
x5				

	A03	F67252
		Date / Name
DRAWN	12.01.99/NTW	
APPROVED	09.03.99/NTS	
ISSUED	H. WEBER	

Schutzvermerk nach DIN 34 beachten

[1997, 8. 11. 2]
$USER_CAE_Boards\main_cs\control_cs\design\ecg_digi

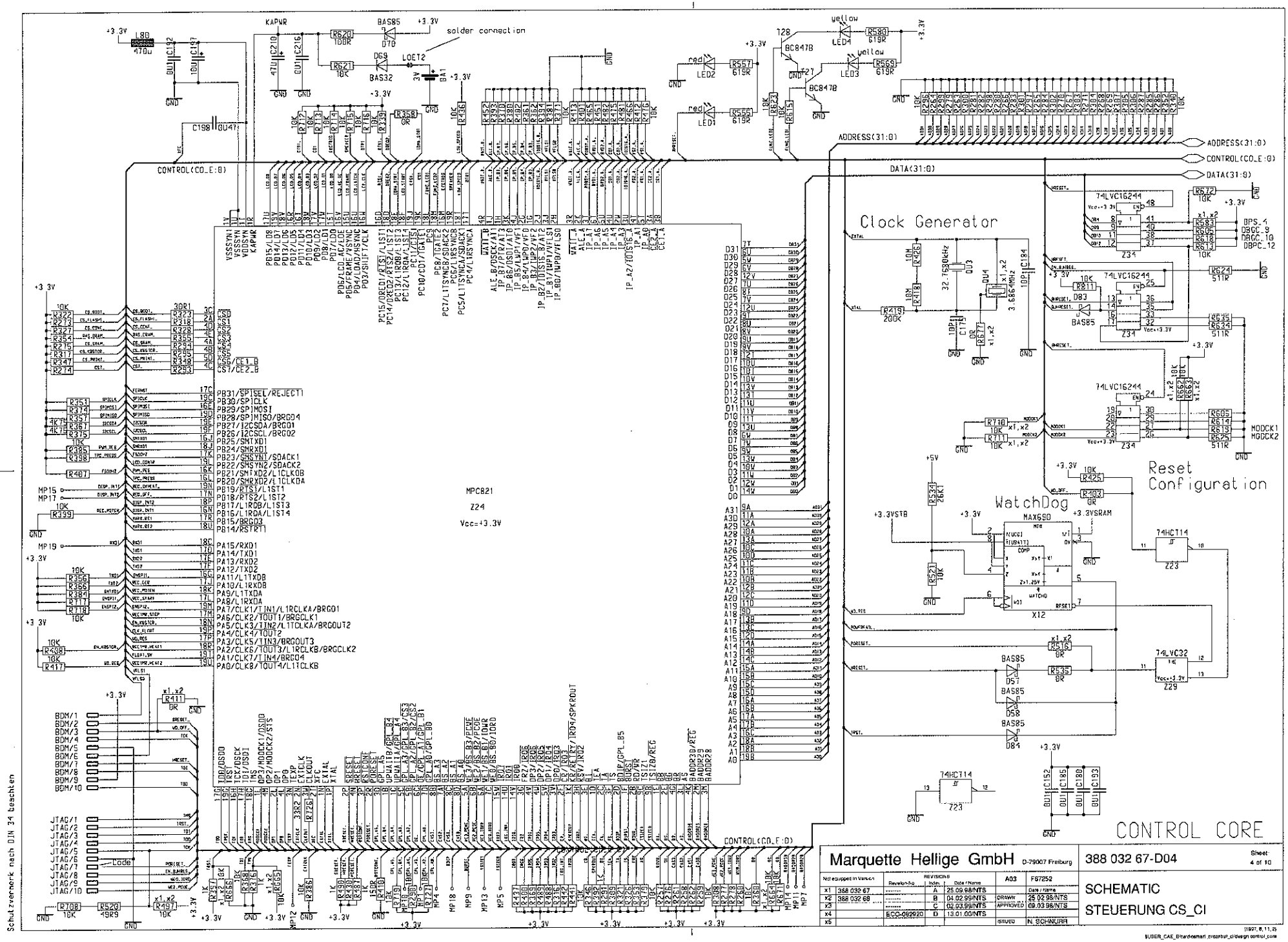
MPC821
Z24
Vcc=+3.3V
Clock Generator
Reset Configuration
WatchDog
CONTROL CORE
ADDRESS(31:0)
DATA(31:0)
CONTROL(CO_E:0)
Marquette Hellige GmbH
D-79007 Freiburg
388 032 67-D04
Sheet: 4 of 10
SCHEMATIC
STEUERUNG CS_CI
Schutzvermerk nach DIN 34 beachten

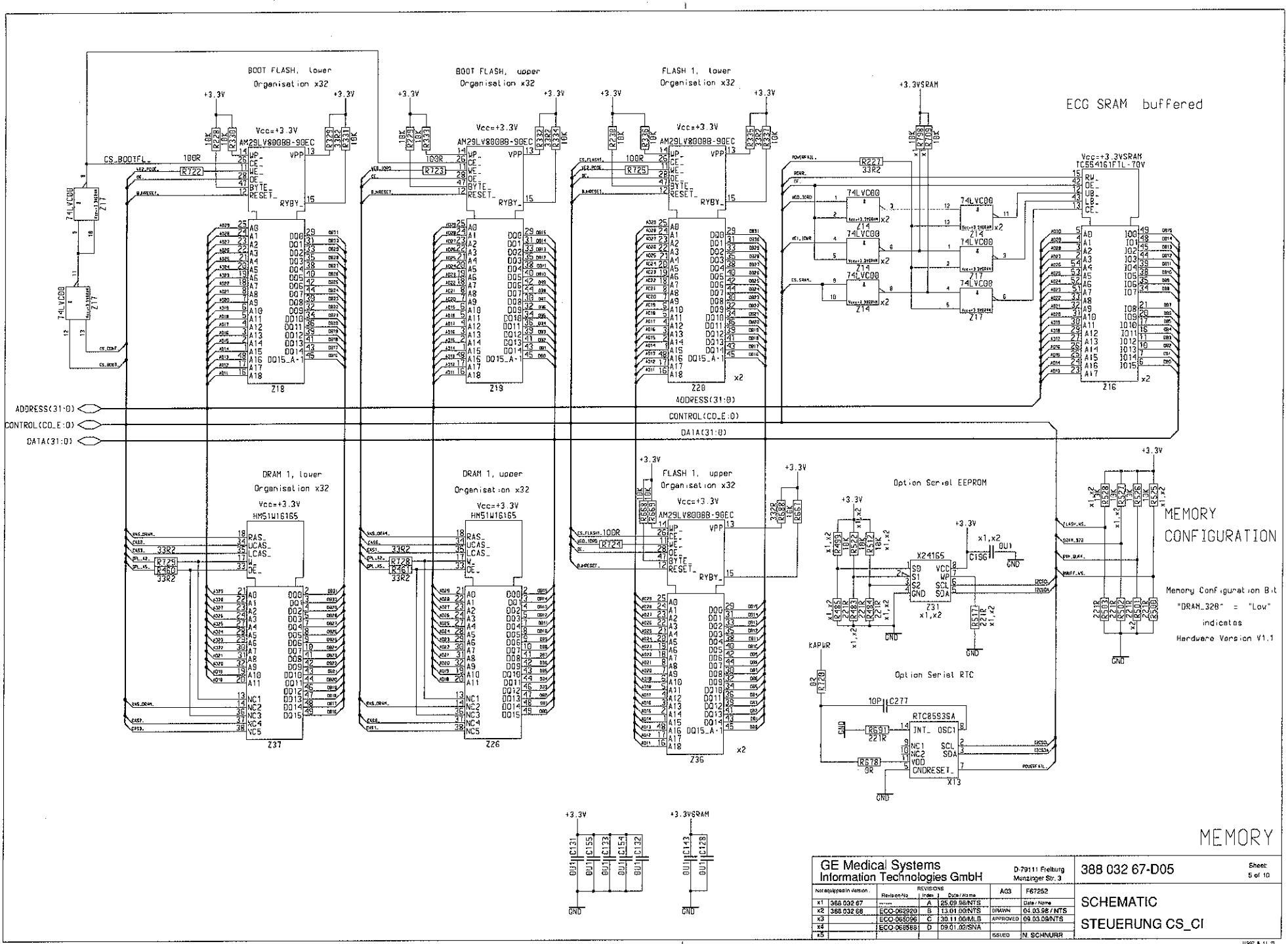

GE Medical Systems Information Technologies GmbH	D-79111 Freiburg Munzinger Str. 3	388 032 67-D05	Sheet: 5 of 10

Not equipped in version		REVISIONS Revision-No.	Index	Date / Name	A03	F67252
x1	388 032 67	------	A	25.09.98/NTS		Date / Name
x2	388 032 68	ECO-062920	B	13.01.00/NTS	DRAWN	04.03.98 / NTS
x3		ECO-065096	C	30.11.00/MLB	APPROVED	09.03.09/NTS
x4		ECO-068588	D	09.01.02/SNA		
x5					ISSUED	N. SCHNURR

SCHEMATIC
STEUERUNG CS_CI

Schutzvermerk nach DIN 34 beachten

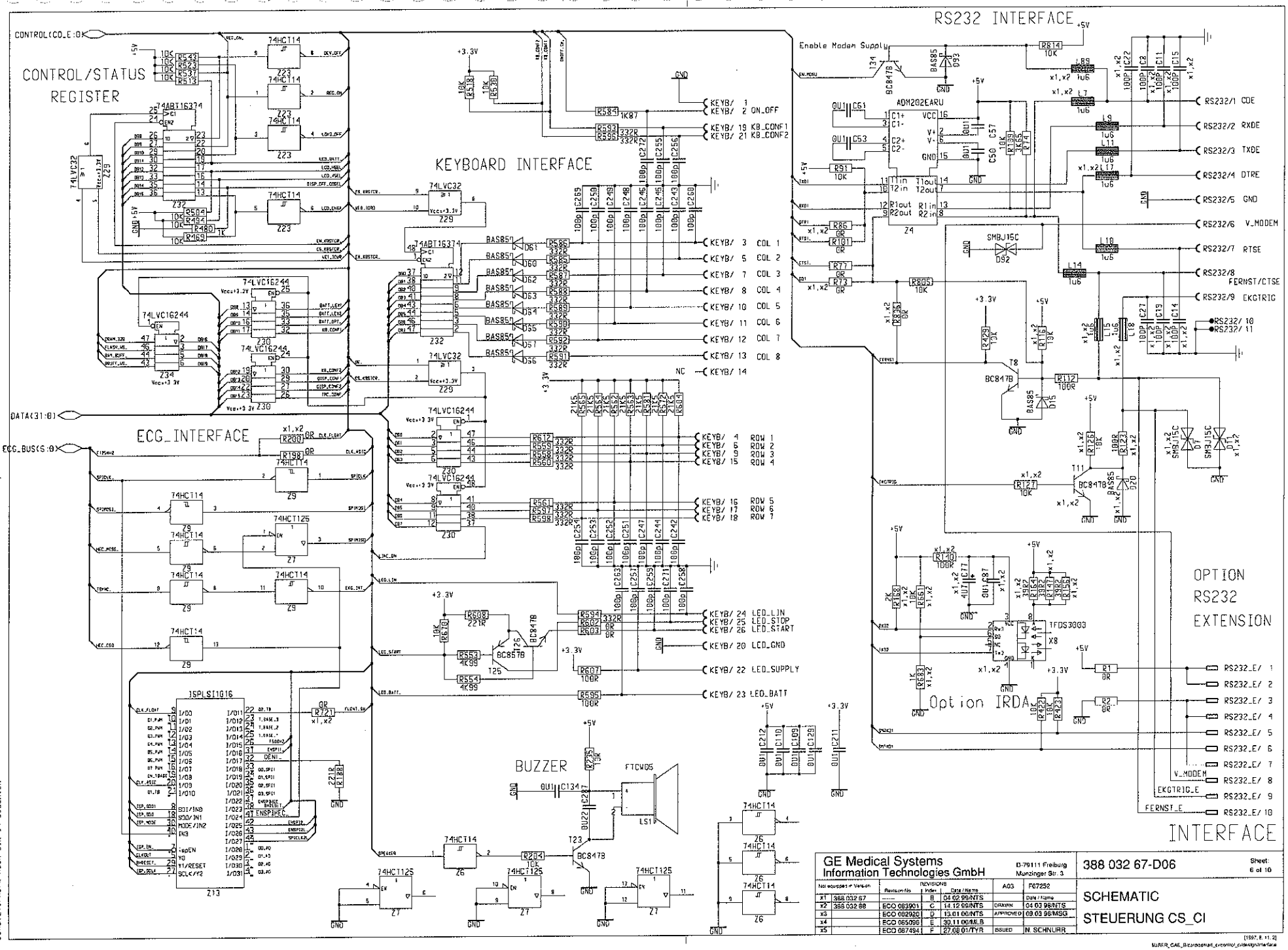
CONTROL/STATUS REGISTER
KEYBOARD INTERFACE
ECG_INTERFACE
BUZZER
RS232 INTERFACE
OPTION RS232 EXTENSION
Option IRDA
INTERFACE
CONTROL(CO_E:0)
DATA(31:0)
ECG_BUS(S:0)
Enable Modem Supply
KEYB/ 1 ON_OFF
KEYB/ 19 KB_CONF1
KEYB/ 21 KB_CONF2
KEYB/ 3 COL 1
KEYB/ 5 COL 2
KEYB/ 7 COL 3
KEYB/ 8 COL 4
KEYB/ 10 COL 5
KEYB/ 11 COL 6
KEYB/ 12 COL 7
KEYB/ 13 COL 8
KEYB/ 14 NC
KEYB/ 4 ROW 1
KEYB/ 6 ROW 2
KEYB/ 9 ROW 3
KEYB/ 15 ROW 4
KEYB/ 16 ROW 5
KEYB/ 17 ROW 6
KEYB/ 18 ROW 7
KEYB/ 24 LED_LIN
KEYB/ 25 LED_STOP
KEYB/ 26 LED_START
KEYB/ 20 LED_GND
KEYB/ 22 LED_SUPPLY
KEYB/ 23 LED_BATT
RS232/1 CDE
RS232/2 RXDE
RS232/3 TXDE
RS232/4 DTRE
RS232/5 GND
RS232/6 V_MODEM
RS232/7 RTSE
RS232/8 FERNST/CTSE
RS232/9 EKGTRIG
RS232/ 10
RS232/ 11
RS232_E/ 1
RS232_E/ 2
RS232_E/ 3
RS232_E/ 4
RS232_E/ 5
RS232_E/ 6
RS232_E/ 7
RS232_E/ 8 V_MODEM
RS232_E/ 9 EKGTRIG_E
RS232_E/ 10 FERNST_E
GE Medical Systems Information Technologies GmbH
D-79111 Freiburg Munzinger Str. 3
388 032 67-D06
Sheet: 6 of 10
SCHEMATIC
STEUERUNG CS_CI
A03
F07252
DRAWN 04.03.98/NTS
APPROVED 09.03.98/MSG
ISSUED N. SCHNURR
Schutzvermerk nach DIN 34 beachten

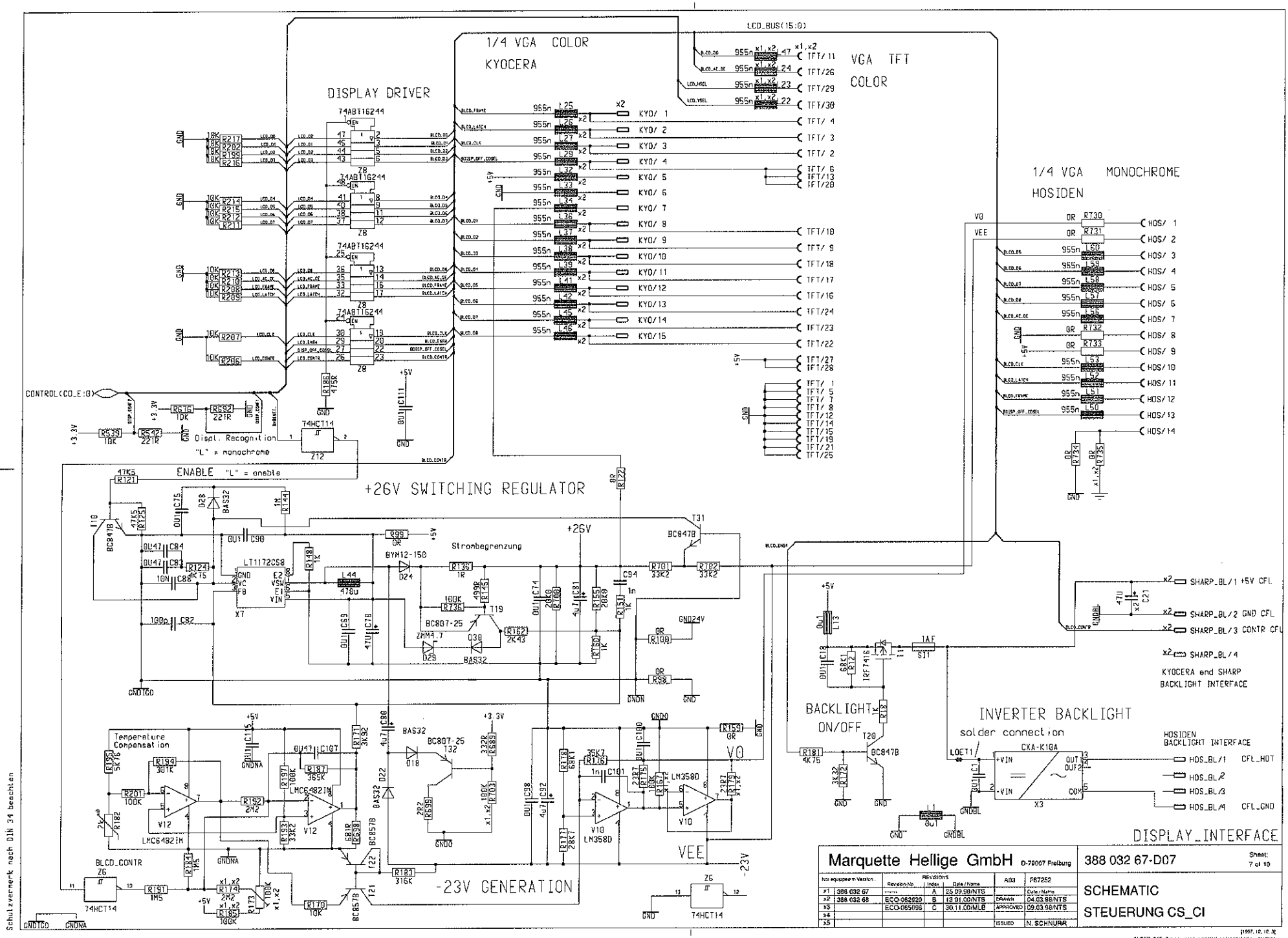
1/4 VGA COLOR
KYOCERA
DISPLAY DRIVER
VGA TFT
COLOR
1/4 VGA MONOCHROME
HOSIDEN
+26V SWITCHING REGULATOR
-23V GENERATION
ENABLE "L" = enable
Disal. Recognition
"L" = monochrome
Temperature Compensation
BACKLIGHT ON/OFF
INVERTER BACKLIGHT
solder connection
KYOCERA and SHARP BACKLIGHT INTERFACE
HOSIDEN BACKLIGHT INTERFACE
DISPLAY_INTERFACE
SCHEMATIC
STEUERUNG CS_CI
Marquette Hellige GmbH
388 032 67-D07

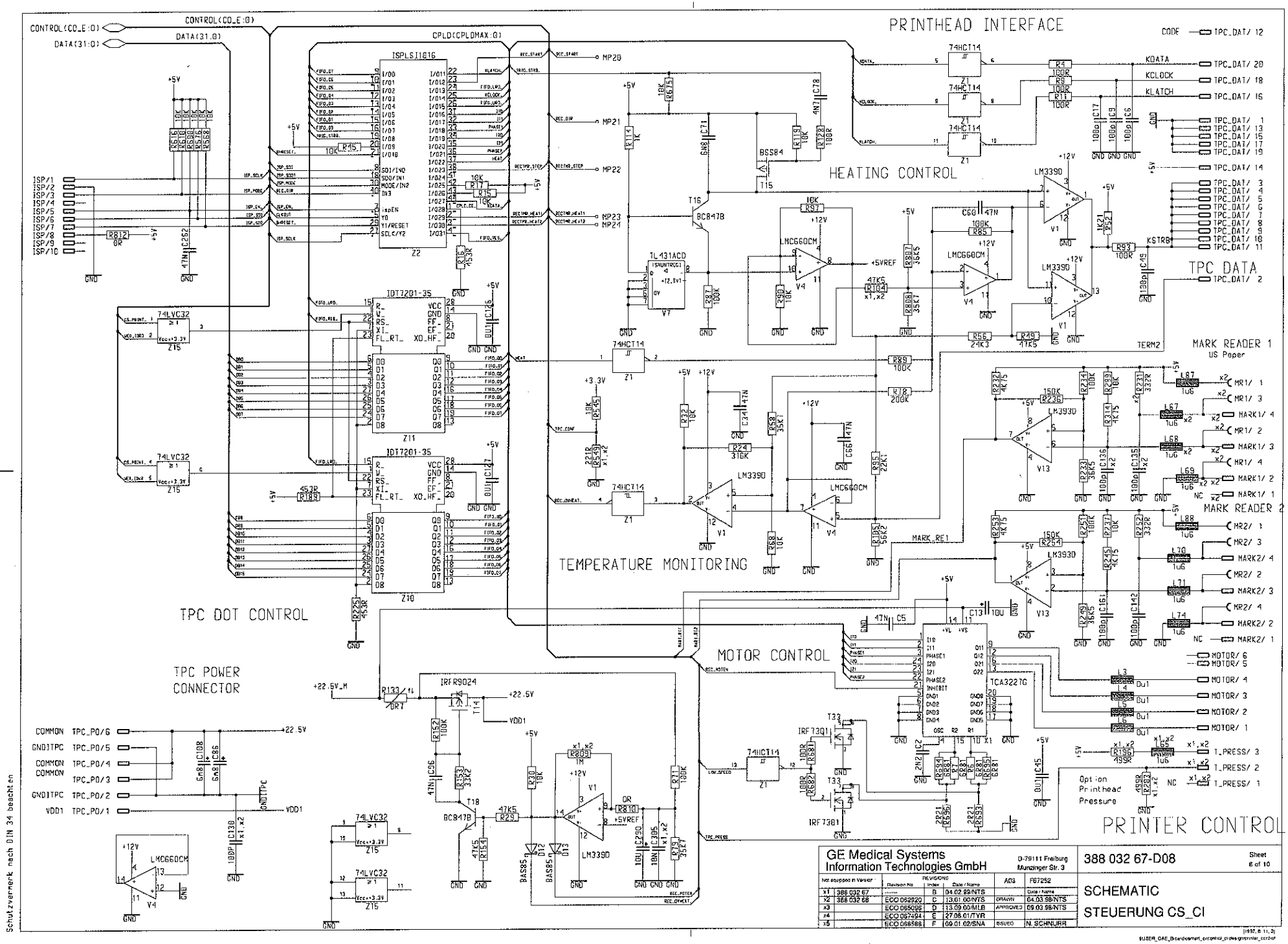
PRINTHEAD INTERFACE
HEATING CONTROL
TPC DATA
MARK READER 1
MARK READER 2
TEMPERATURE MONITORING
TPC DOT CONTROL
TPC POWER CONNECTOR
MOTOR CONTROL
PRINTER CONTROL
ISPLSI1016
CPLD(CPLDMAX:0)
CONTROL(CODE:0)
DATA(31:0)
GE Medical Systems
Information Technologies GmbH
D-79111 Freiburg
Munzinger Str. 3
388 032 67-D08
Sheet 6 of 10
SCHEMATIC
STEUERUNG CS_CI
Schutzvermerk nach DIN 34 beachten

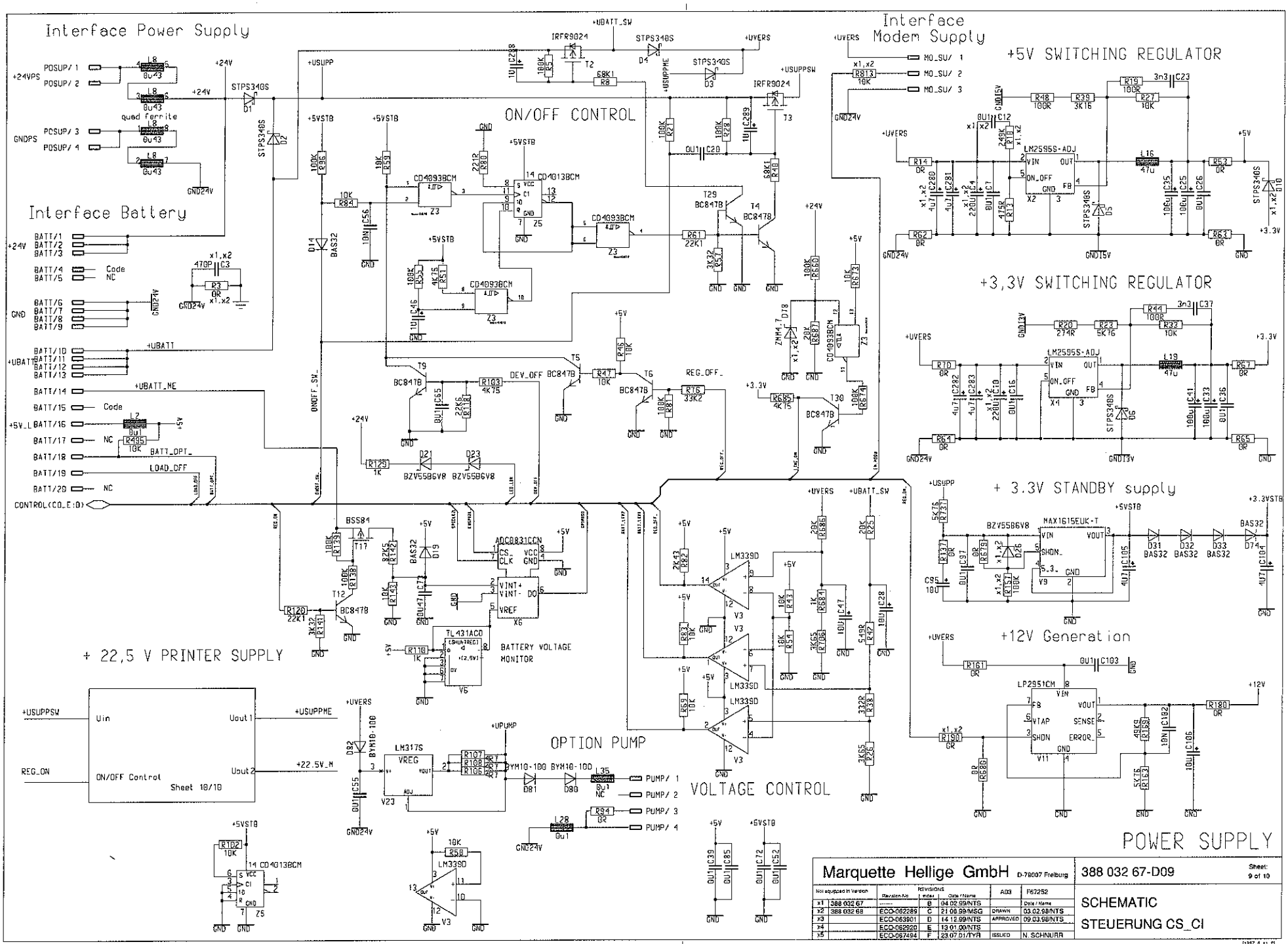
Interface Power Supply
Interface Battery
ON/OFF CONTROL
Interface Modem Supply
+5V SWITCHING REGULATOR
+3,3V SWITCHING REGULATOR
+ 3.3V STANDBY supply
+12V Generation
+ 22,5 V PRINTER SUPPLY
BATTERY VOLTAGE MONITOR
OPTION PUMP
VOLTAGE CONTROL
POWER SUPPLY
+USUPPSW
Uin
Uout1
Uout2
+USUPPME
+22.5V_M
REG_ON
ON/OFF Control
Sheet 10/10
Marquette Hellige GmbH
D-79007 Freiburg
388 032 67-D09
Sheet: 9 of 10
SCHEMATIC
STEUERUNG CS_CI
Schutzvermerk nach DIN 34 beachten

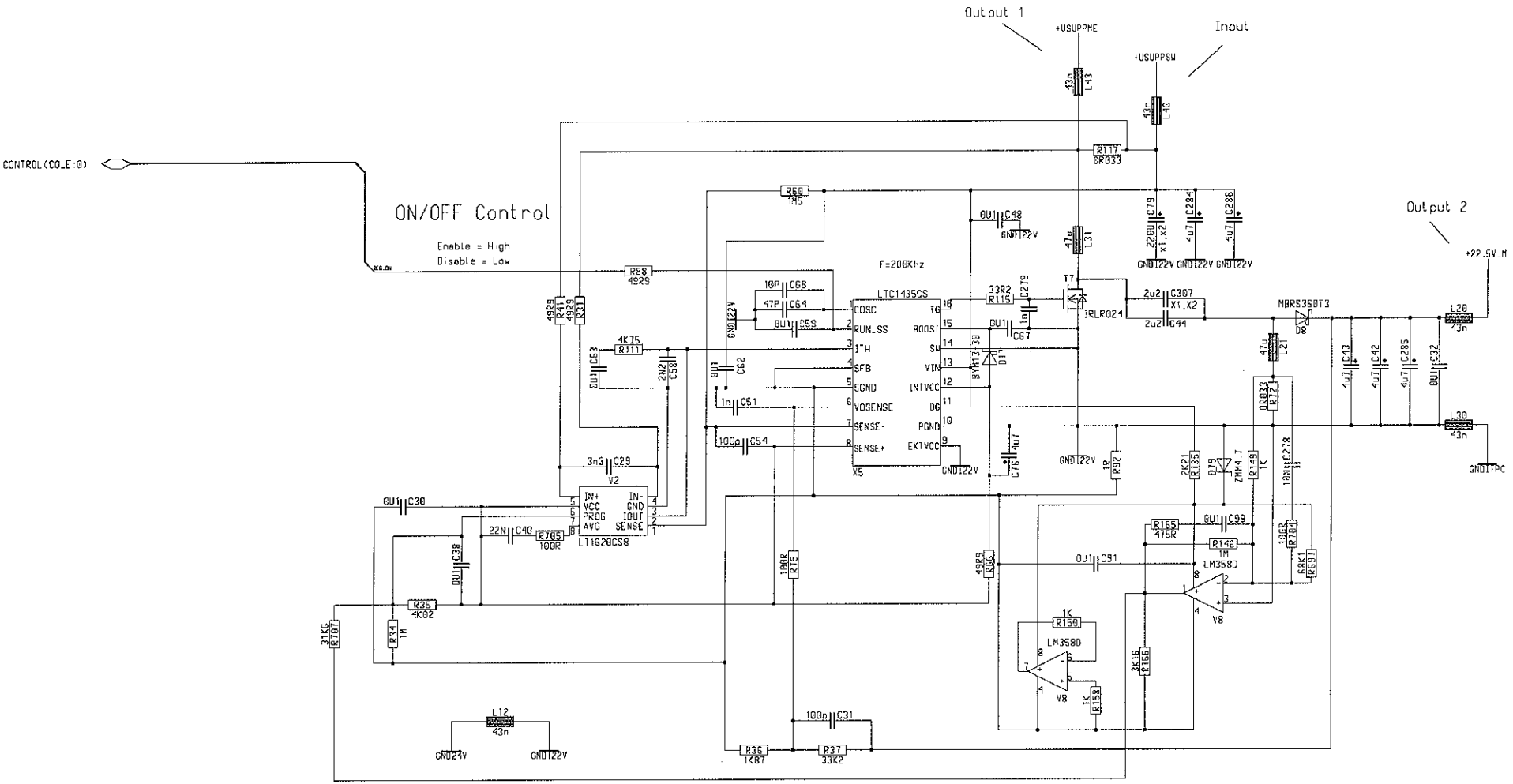

PRINTER SUPPLY

Marquette Hellige GmbH D-79007 Freiburg						388 032 67-D10	Sheet: 10 of 10
Not equipped in Version		REVISIONS Revision-No	Index	Date / Name	A03	F67252	SCHEMATIC
x1	388 032 67	------	A	14.09.98/NTS		Date / Name	
x2	388 032 68	ECO-062920	B	13.01.00/NTS	DRAWN	04.03.98/NTS	STEUERUNG CS_CI
x3		ECO-065096	C	30.11.00/MLB	APPROVED	08.03.98/NTS	
x4							
x5					ISSUED	N. SCHNURR	

(1998 1, 25, 2)
$USER_CAE_Bicardiosman_crcontrol_c/printer_supply

Schutzvermerk nach DIN 34 beachten

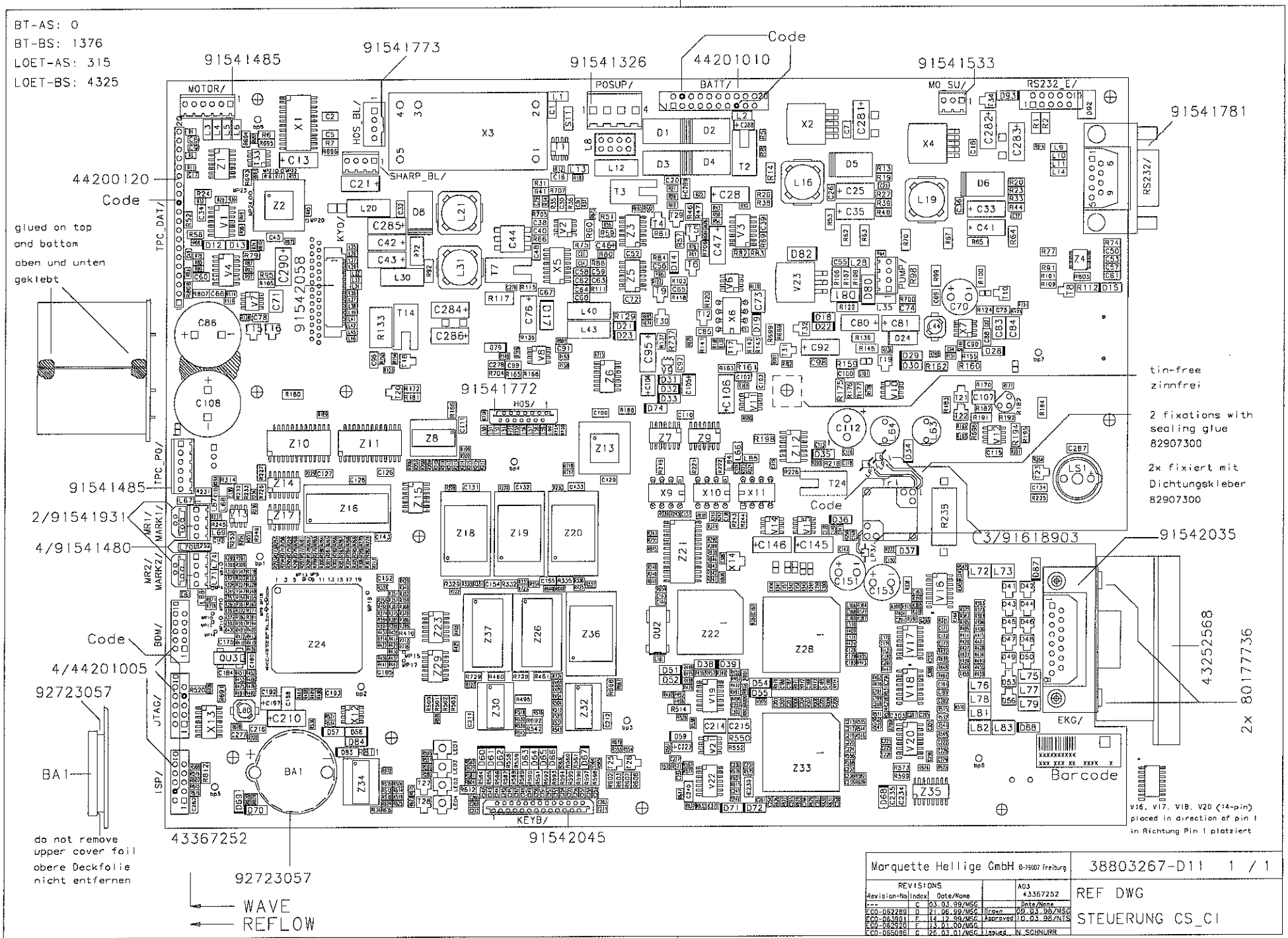
BT-AS: 0
BT-BS: 1376
LOET-AS: 315
LOET-BS: 4325
91541485
91541773
91541326
Code
44201010
91541533
91541781
MOTOR/
HOS_BL/
SHARP_BL/
POSUP/
BATT/
MO_SU/
RS232_E/
RS232/
44200120
Code
glued on top
and bottom
oben und unten
geklebt
TPC_DAT/
TPC_PO/
91542058
91541772
HOS/
tin-free
zinnfrei
2 fixations with
sealing glue
82907300
2x fixiert mit
Dichtungskleber
82907300
91541485
2/91541931
MR1/
MARK1/
4/91541480
MR2/
MARK2/
3/91618903
91542035
Code
4/44201005
BDM/
JTAG/
92723057
ISP/
BA1
43252568
2x 80177736
EKG/
Barcode
V16, V17, V18, V20 (14-pin)
placed in direction of pin 1
in Richtung Pin 1 platziert
do not remove
upper cover foil
obere Deckfolie
nicht entfernen
43367252
92723057
KEYB/
91542045
WAVE
REFLOW
Schutzvermerk nach DIN 34 beachten.
Marquette Hellige GmbH D-79007 Freiburg
38803267-D11 1 / 1
REVISIONS
Revision-No | Index | Date/Name
--- | C | 03.03.99/MSG
FCO-082289 | D | 21.06.99/MSG
FCO-061981 | E | 14.12.99/MSG
FCO-062020 | F | 13.01.00/MSG
FCO-065096 | G | 26.03.01/MSG
A03
43367252
Date/Name
Drawn 09.03.98/MSG
Approved 10.03.98/NTS
Issued N.SCHNURR
REF DWG
STEUERUNG CS_CI

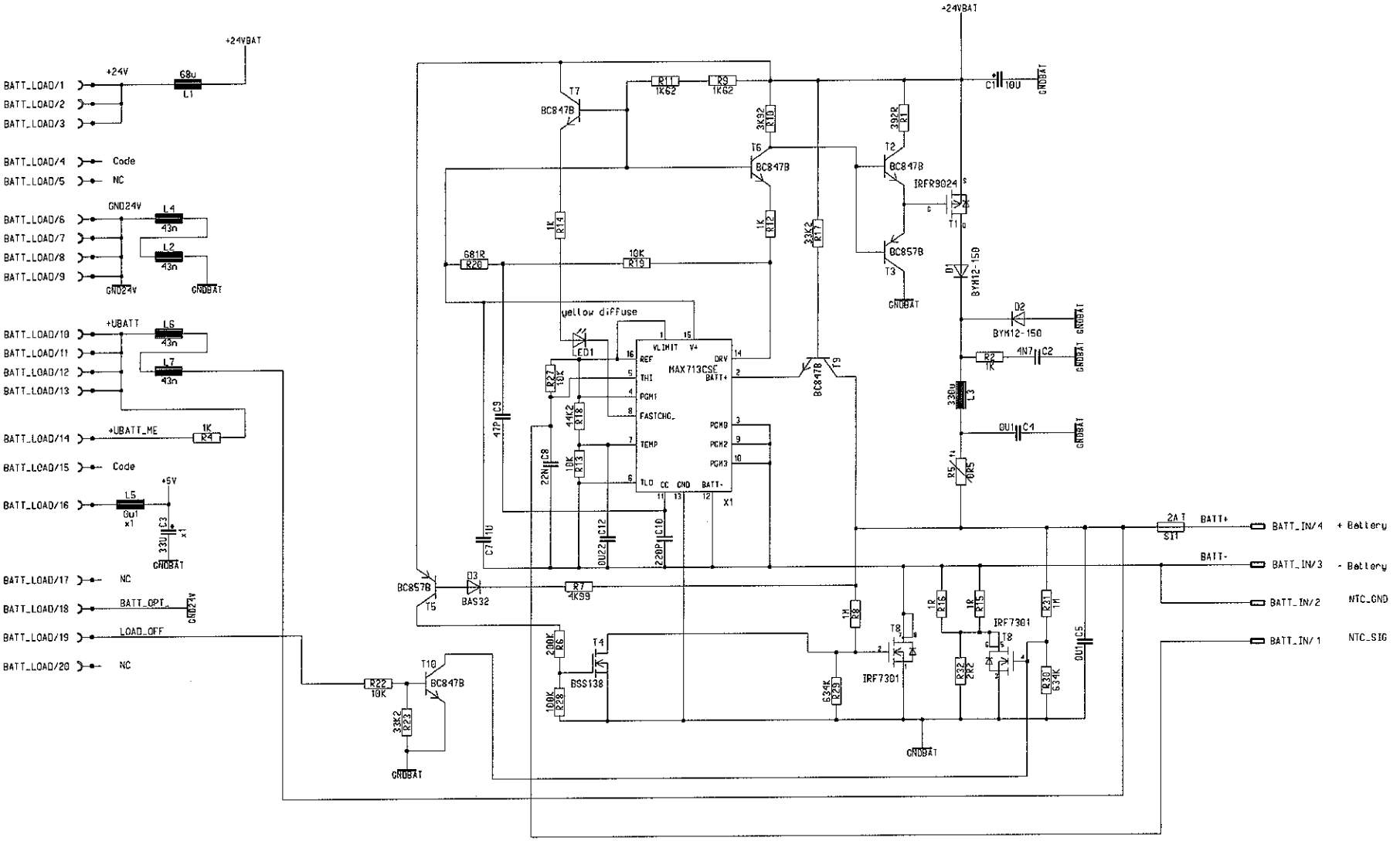

Marquette Hellige GmbH	D-79007 Freiburg	388 032 90 - D01	Sheet 1 of 1

Not adopted in Version		Revision-No	REVISIONS Index	Date / Name	A03	F67267
x1	388 032 90	...	A	03.08.98 VRP		Date / Name
x2		...	B	23.09.98 VRP	DRAWN	31.07.98/VRP
x3		ECO-062727	C	24.06.99 HAW	APPROVED	31.07.98/NTS
x4		ECO-062920	D	28.01.00 MSG		
x5					ISSUED	N. Schnurr

Schematic

Akku-Ladung CS_CI

\USER_CAE_ffl\centosmart_cr\battload_cr\design

Schutzvermerk nach DIN 34 beachten

Schutzvermerk nach DIN 34 beachten.

BT-AS: 0
BT-BS: 53
LOET-AS: 34
LOET-BS: 114

A-SIDE

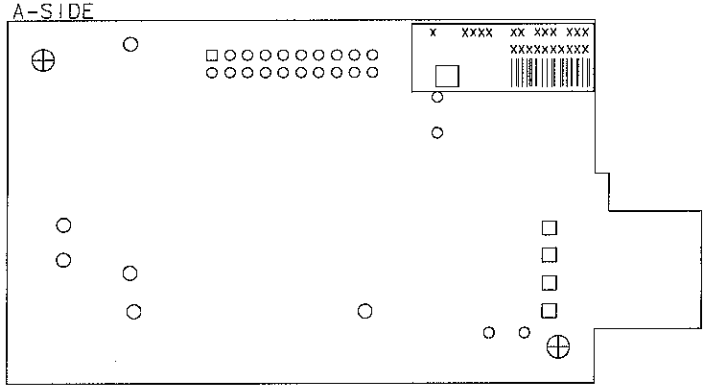

B-SIDE

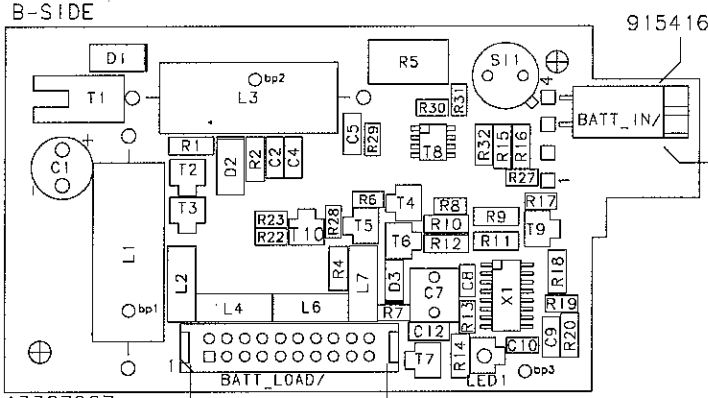

CABLE ASSY 38327394

WAVE

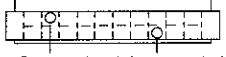

coded from bottom side
codiert auf Unterseite

Marquette Hellige GmbH D-79007 Freiburg				38803290-D02 1 / 1
REVISIONS			A04 43367267	REF DWG
Revision-No	Index	Date/Name		Date/Name
----	A	03.08.98/MSG		
----	B	29.09.98/HAW	Drawn	17.04.98/MNS
062920	C	26.01.00/MSG	Approved	17.04.98/MSG
065708	D	30.10.00/MSG		
			Issued	M. Steinle

Akku-Ladung CS_CI

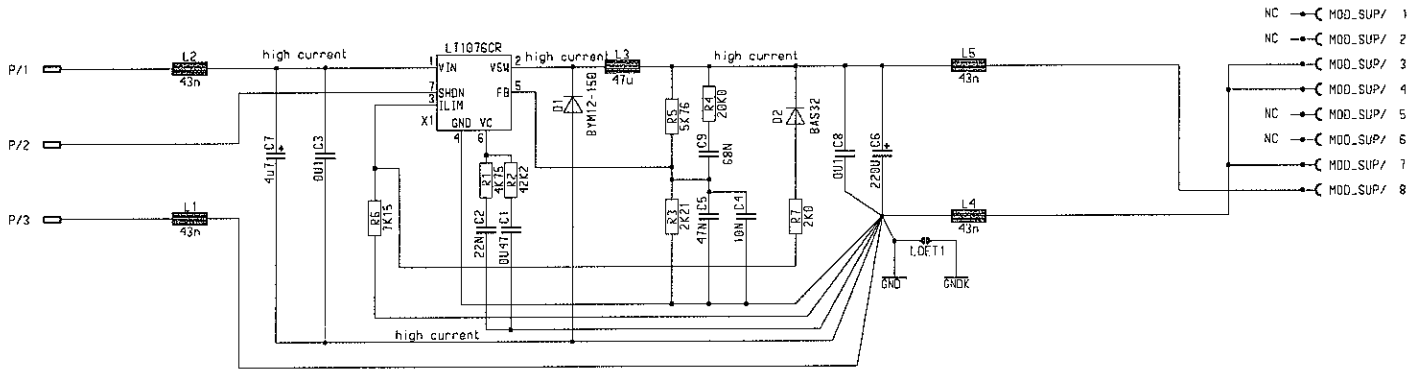

Marquette Hellige GmbH D-79007 Freiburg						2000772-001	Sheet: 1 of 01
Not equipped in Version		REVISIONS Revision-No	Index	Date / Name	A03	2000770-001	
x1	2000771-001	ER20593	1	09.06.99/VRP		Date / Name	
x2		ER20816	2	20.07.99/HAW	DRAWN	09.06.99/VRP	SCHEMATIC
x3		062920	A	23.12.99/NTS	APPROVED	09.06.99/NTS	
x4		065687	B	18.10.00/MSG			MODEM SUPPLY CS_M
x5					ISSUED	V.PLACKE	

(1999 8.9 4)
$USER_CAE_Amodem/design

Schutzvermerk nach DIN 34 beachten

BT-AS = 0
BT-BS = 27
Loet-AS = 15
Loet-BS = 53

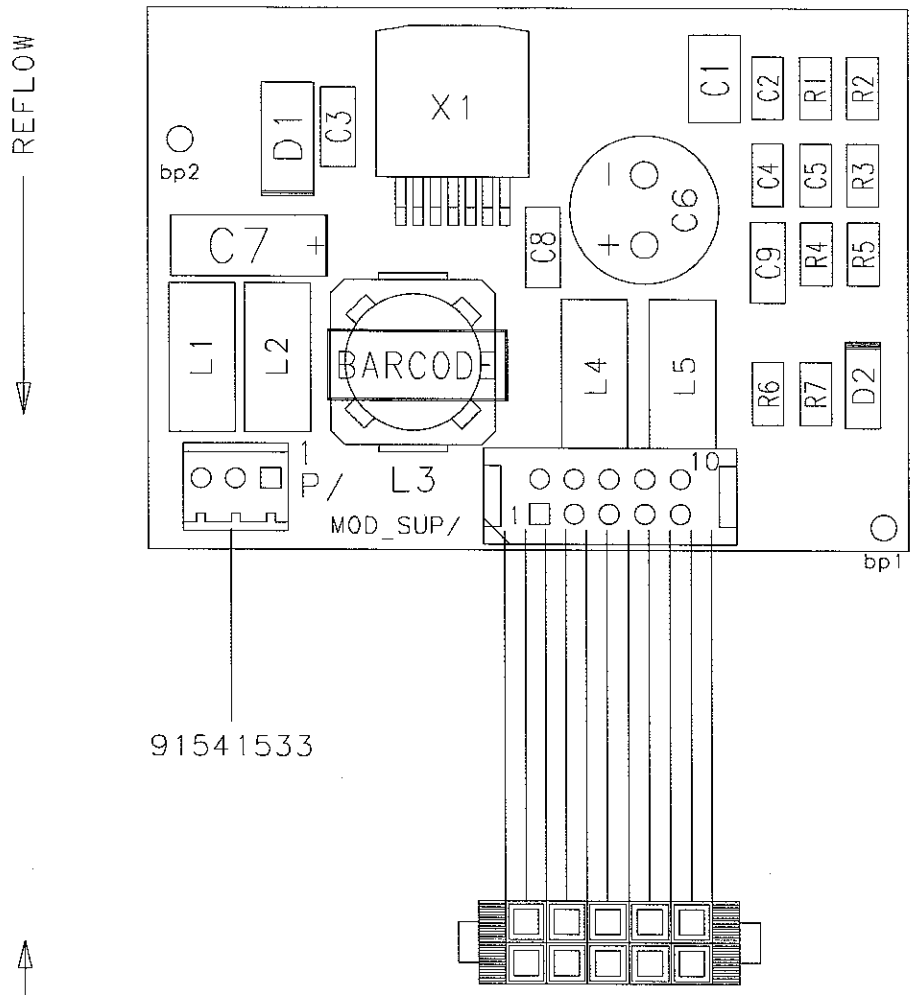

Marquette Hellige GmbH D-79007 Freiburg				2000771-002 1 / 1
REVISIONS			A04 2000770-001	DOC REF DWG
Revision-No	Index	Date/Name	Date/Name	MODEM SUPPLY CS_M
ER20593	1	21.06.99/HAW		
ER20816	2	20.07.99/HAW	Drawn 21.06.99/HAW	
062920	A	12.01.00/MSC	Approved 21.06.99/MSC	
065687	B	18.10.00/MSC		
			Issued N.Weiss	

Schutzvermerk nach DIN 34 beachten.

GE Medical Systems
Information Technologies

gemedical.com

World Headquarters
GE Medical Systems
Information Technologies, Inc.
8200 West Tower Avenue
Milwaukee, WI 53223 USA
Tel: + 1 414 355 5000
1 800 558 5120 (US only)
Fax: + 1 414 355 3790

European Representative
GE Medical Systems
Information Technologies GmbH
Munzinger Straße 3-5
D-79111 Freiburg
Germany
Tel: + 49 761 45 43 - 0
Fax: + 49 761 45 43 - 233

Asia Headquarters
GE Medical Systems
Information Technologies Asia; GE (China) Co., Ltd.
24th Floor, Shanghai MAXDO Center,
8 Xing Yi Road, Hong Qiao Development Zone
Shanghai 200336, P.R. China
Tel: + 86 21 5257 4650
Fax: + 86 21 5208 2008